NOTICE OF PUBLIC HEARINGS

BIRMINGHAM CITY COMMISSION
PUBLIC HEARING OF NECESSITY PUBLIC HEARING OF CONFIRMATION

Meeting Date, Time, Location:	HEARING OF NECESSITY FOR SPECIAL ASSESSMENT DISTRICT Monday, December 8, 2014, 7:30 PM Municipal Building, 151 Martin, Birmingham, MI
Meeting Date, Time, Location:	HEARING OF CONFIRMATION FOR SPECIAL ASSESSMENT DISTRICT Monday, January 12, 2015, 7:30 PM Municipal Building, 151 Martin, Birmingham, MI
Location:	Hamilton Alley Reconstruction
Nature of Improvement:	Reconstruction of the alley between Hamilton Avenue and Park Street
City Staff Contact:	Paul O'Meara 248.530.1836 pomeara@bhamgov.org
Notice Requirements:	Mail to affected property owners Publish November 16 & 23, 2014
Approved minutes may be reviewed at:	City Clerk's Office

You or your agent may appear at the hearings to express your views; however, if you fail to protest either in person or by letter received on or before the date of the hearing, you cannot appeal the amount of the special assessment to the Michigan Tax Tribunal. Mail any correspondence to: City Clerk, P.O. Box 3001, Birmingham, MI 48012.

The property owner may file a written appeal of the special assessment with the State Tax Tribunal within 30 days after the confirmation of the special assessment roll if that special assessment was protested at the hearing held for the purpose of confirming the roll.

All special assessments, including installment payments, shall, from the date of the confirmation thereof, constitute a lien on the respective lots or parcels assessed, and until paid shall be charged against the respective owners of the lots or parcels assessed.

Persons with disabilities needing accommodations for effective participation in this meeting should contact the City Clerk's Office at 248.530.1880 (voice) or 248.644.5115 (TDD) at least one day in advance to request mobility, visual, hearing or other assistance.

City of Birmingham
A Walkable Community

MEMORANDUM

Engineering Department

DATE: **November 25, 2014**

TO: **Joseph A. Valentine, City Manager**

FROM: **Paul T. O'Meara, City Engineer**

SUBJECT: **Hamilton Alley Reconstruction**
Hamilton Ave. to Park St.
SAD Public Hearing of Necessity

At the meeting of November 10, the City Commission reviewed the most conceptual drawings for the Hamilton Alley Reconstruction project. The drawings were the result of reviews conducted both by the Architectural Review Committee and the Planning Board. The Commission was split on the idea of how much exposed aggregate was now proposed. Some felt that there was not enough, while others felt that there was too much. It was decided that concept plans going in both directions should be provided, and input from the adjacent property owners should be solicited at the time of the public hearing (set for December 8, 2014).

As a result, the attached public notice was mailed to all property owners, as well as hand delivered to all tenants that will be involved in the special assessment district. The notice identifies the location on the City's website where the latest drawings are now posted, and encourages feedback from the members of the district: www/bhamgov.org/hamiltonalley. The website has text that explains the various plan sheets, as well as access to the most recent set of plans. The text and most recent plans are attached to this memo for your reference. Following that attachment are the other memos that were prepared for previous discussions on this topic.

It is requested that the Commission provide direction on two different design issues, as outlined on pages 1 and 2 of the attached drawings:

1. The amount of exposed aggregate being installed varies from sheet 1 to 2. As explained on the attached website text, the design on sheet 1 is estimated to cost adjacent owners about $200 per foot, while the design on sheet 2 is estimated to cost adjacent owners about $195. Both designs are simpler and use less exposed aggregate than what was originally proposed, therefore, the price difference between the two is relatively small.
2. The pavement design at the crosswalk area varies from sheet 1 to 2. The exposed aggregate "path" on sheet 1 features a diagonal path between the two crosswalks, while sheet 2's exposed aggregate "path" is more of a straight line "s" between the two crosswalks. There is no difference in cost for these two versions.

To date, our office has not received any comment relative to the most recent set of plans.

As a reminder, please note that if the project is approved, a separate special assessment district for the replacement of sewer laterals within the alley will also be recommended, at a later date.

A suggested resolution has been prepared below should the Commission wish to determine necessity of the improvements, and authorize this project.

Suggested Resolution:

WHEREAS, The City Commission is of the opinion that construction of the improvement herein is declared a necessity; and

WHEREAS, The City Commission has not declared it practicable to cause estimates of cost thereof and plans to be made at this time, now therefore be it,

RESOLVED, that there be constructed an improvement to be hereinafter known as:

HAMILTON ALLEY – HAMILTON AVE. TO PARK ST.

consisting of the construction of an 18 foot wide concrete pavement with a decorative combination of plain broom-finished concrete and exposed aggregate concrete accents as outlined on sheet (1 or 2) of the conceptual plans, and featuring the pavement design shown on sheet (1 or 2) in the area where the crosswalks meet, be it further

RESOLVED, that at such time as the Assessor is directed to prepare the assessment roll, one hundred percent (100%) of the estimated cost be levied against the assessment district, be it further

RESOLVED, that there be a special assessment district created and special assessments levied in accordance with benefits against the properties within such assessment district, said special assessment district shall be all properties, both public and private, within the following district:

> Lot 8, except for that portion taken for Park Street Right of Way, Lots 10 through 28 inclusive, Lot 29 except for that portion taken for alley purposes, Lots 30 through 37 inclusive, Lot 38, except for that portion taken for Park Street Right-of-Way, of "Assessor's Plat No. 21", being part of the S.E. ¼ of the S.W. ¼ and the S.W. ¼ of the S.E. ¼of Section 25, T. 2 N., R. 10. E., City of Birmingham, Oakland County, Michigan.

be it further

RESOLVED, that the Commission shall meet on Monday, January 12, 2015, at 7:30 P.M., for the purpose of conducting a public hearing to confirm the roll for the paving of the Hamilton Alley from Hamilton Ave. to Park St.

City of Birmingham
A Walkable Community

MEMORANDUM

Engineering Dept.

DATE: **November 14, 2014**

TO: **Birmingham Web Site**

FROM: **Paul T. O'Meara, City Engineer**

SUBJECT: **S. Hamilton Alley Reconstruction Project**
Hamilton Ave. to Park St.

A public hearing to consider creating a special assessment to improve the S. Hamilton Alley was held before the City Commission on September 22. At that time, the Commission asked for further review of the concept plan by both the Architectural Review Committee, and the Planning Board. Those reviews have now occurred, and conceptual plans have been prepared for the purposes of discussion. The City Commission has reviewed these concepts, and is asking now for your input. A second public hearing will be held on December 8, 2014, at 7:30 PM.

The following helps clarify what is happening on each sheet:

Sheets 1 and 2 – Sheets 1 and 2 represent four variations on the base plan, as explained below:

a. Exposed Aggregate Concrete: The City is currently installing all new sidewalk and alley surfaces with a mixture of regular sawcut concrete, accented with exposed aggregate sidewalks. A sample of this construction can be found nearby around the Palladium Theatre Building. The exposed aggregate sidewalk, built near the street curb, has a rougher, stony texture, and is more brown in appearance. Based on past input from the property owners, the amount of exposed aggregate concrete has been reduced on both options. Sheet 1 contains more than Sheet 2, but both are substantially less than in the original concept. The estimated special assessment cost has been reduced to $200 per foot for Option 1, and $195 per foot for Option 2. The Commission is looking for input from the public before a preferred option is selected.
b. Design Concept at Pedestrian Crossing: In the area of 261 E. Maple Rd., City owned passageways run north and south from Hamilton Ave. and Maple Rd. to intersect the alley. Since more pedestrians use this part of the alley, the concept depicts a pavement that more closely matches the City sidewalks that will eventually be built on the adjacent streets. On Sheet 1, a diagonal band of exposed aggregate helps direct pedestrians from one walkway to the other. On Sheet 2, a straight line path of exposed aggregate directs pedestrians using 90° turns. The construction cost is about the same for either version. The Commission is looking for input from the public before a preferred option is selected.

Sheet 3 – As depicted in 3D on Sheet 7 of this package, a new sign concept is planned to be introduced with this project. The sign concept was included in an Alleys and Passageways Master Plan created in 2012. Directional signs that help direct pedestrians to other destinations will be installed at key entryways into the passageway system. The signs feature a large "V" that will be hung from an existing street light post. ("V" stands for "Via.") Existing street lights would be used to install such signs at the points shown with blue circles.

In 2016, the City plans to reconstruct Hamilton Ave. A that time, the street lights and sidewalks in the area will be updated, including the City-owned passageway located between Comerica Bank and Commonwealth Restaurant (east of 300 Hamilton Ave.). Street lights will be located in the locations shown by the red circles, and "V" signs will be installed at these locations as well at that time.

The "V" signs will help create interest for pedestrians, but also provide guidance. For example, the sign on Maple Rd. will have a directional sign underneath it saying "TO HAMILTON AVE." Likewise, the directional sign located on the south side of the alley will have a directional sign saying "TO MAPLE RD."

Sheet 4 – Comments relative to the poor appearance of the dumpsters located in the alley have been made both by the City's board members, as well as the public. Staff is currently attempting to start conversations with three property owners about the potential of setting aside some private property for the installation of a community trash compactor that could be shared by many properties. However, if those plans do not materialize, there is a proposal to partially screen the main dumpster areas from the side view. Additional details about the screens can be found below on Sheets 9 and 10 of this package.

Each of the yellow rectangles on Sheet 4 represent where the majority of dumpsters are placed on City property. By installing two screens at each dumpster area (for a total of six screens), the majority of the dumpsters would be partially concealed, thereby improving the appearance of the alley. (Given the small amount of space available, it is not recommended that gates be installed on these dumpster areas.) See additional detail on Sheets 9 and 10.

Sheets 5 & 6 – Sheets 5 and 6 depict the proposed alley in 3D at the point where the two passageways meet the alley. As suggested above, a pavement using the City sidewalk standard design concept would be used here. The pavement would be flatter here as well, which would reduce vehicle speeds, and make it easier to walk on.

Sheet 7 – Sheet 7 provides a 3D view of the proposed "V" directional signs. The signs would be custom made, and installed on the street lights so that they are visible at night while not having to have a light source of their own.

Sheet 8 – Sheet 8 depicts the alley at the 90° bend, using the option with more exposed aggregate. If the option with less exposed aggregate is built, the joint pattern would remain the same.

Sheets 9 & 10 – Sheets 9 & 10 offer two varieties of dumpster screens. The screens would be built with an anodized metal surface for long service life, mounted on one anchored post with a footing. While they would be within inches of adjacent building walls, they would not be

anchored to them. Each screen would also have a concrete bollard painted a similar color adjacent to it to help keep them from being damaged.

The City has not installed similar screens elsewhere, but for discussion purposes, it is estimated that each screen will cost about $2,000 each installed. The cost of the screens would be charged to those properties that are using the dumpsters at each location. For example, if one property is responsible for all of the dumpsters in an enclosure area, they would be assessed an additional $4,000. If two properties are using some portion of the dumpsters in a particular area, they would each be assessed $2,000. These costs would be added to the base assessment charge, and could be paid back over as many as ten years, at the owner's discretion.

It is not clear how often the screens will be damaged or need maintenance. The City would be responsible for repairing the screens if they are hit. Costs for the repairs will be charged to the properties using the dumpster areas, on an as-needed basis.

PUBLIC HEARING

A public hearing is scheduled before the City Commission at their regular meeting of December 8, 2014. If you are interested in sending written comments that could be reviewed by the Commission in advance of the hearing, please submit them to the City Clerk no later than Wednesday, November 26 (due to the Thanksgiving holiday). You are also welcome to appear and speak at the meeting on December 8.

If you have questions in advance of the hearing on the details of the design, feel free to contact the Engineering Dept. at 248-530-1840.

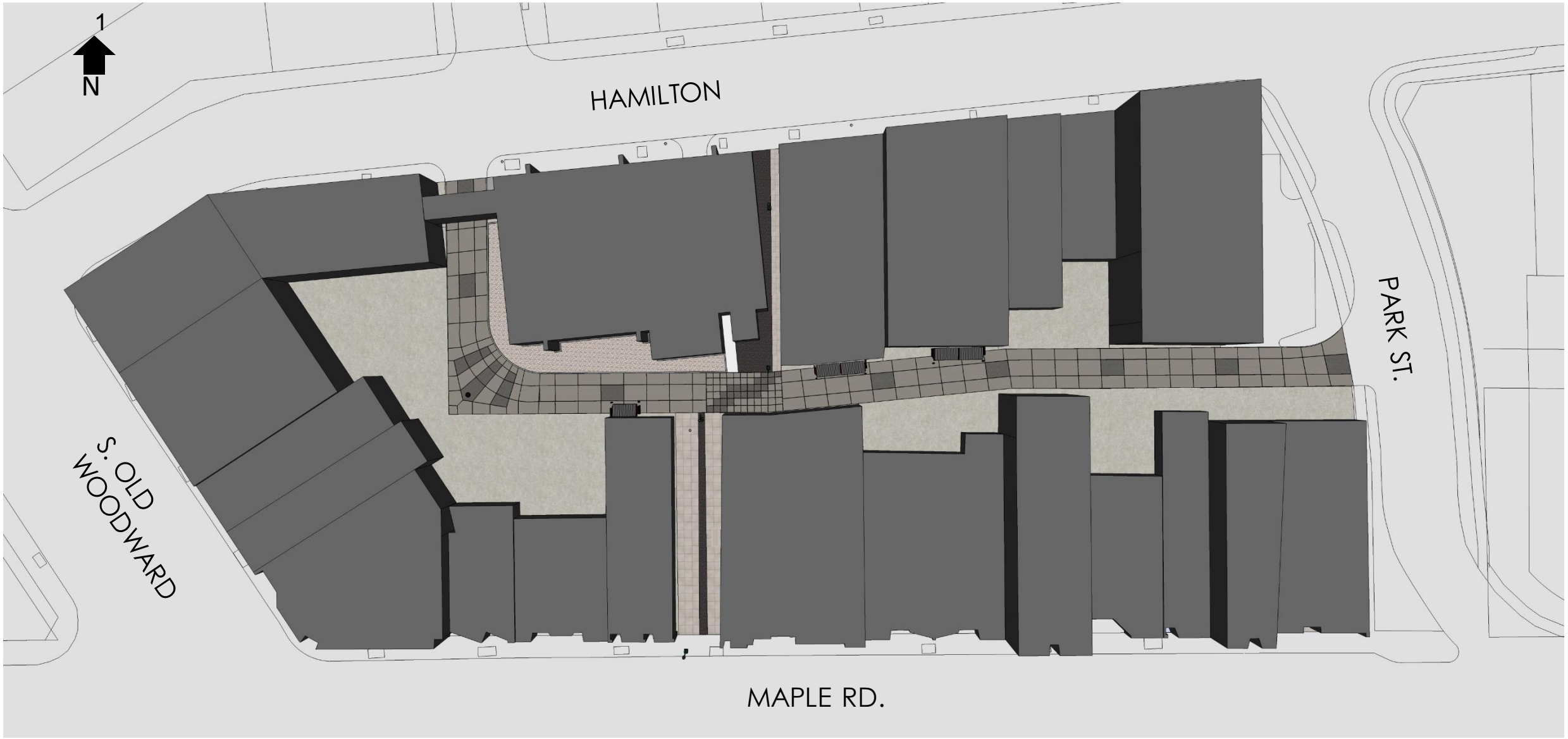

krieger klatt
ARCHITECTS
architecture interiors consulting

HAMILTON ALLEY

ALTERNATE AGGREGATE DESIGN #2

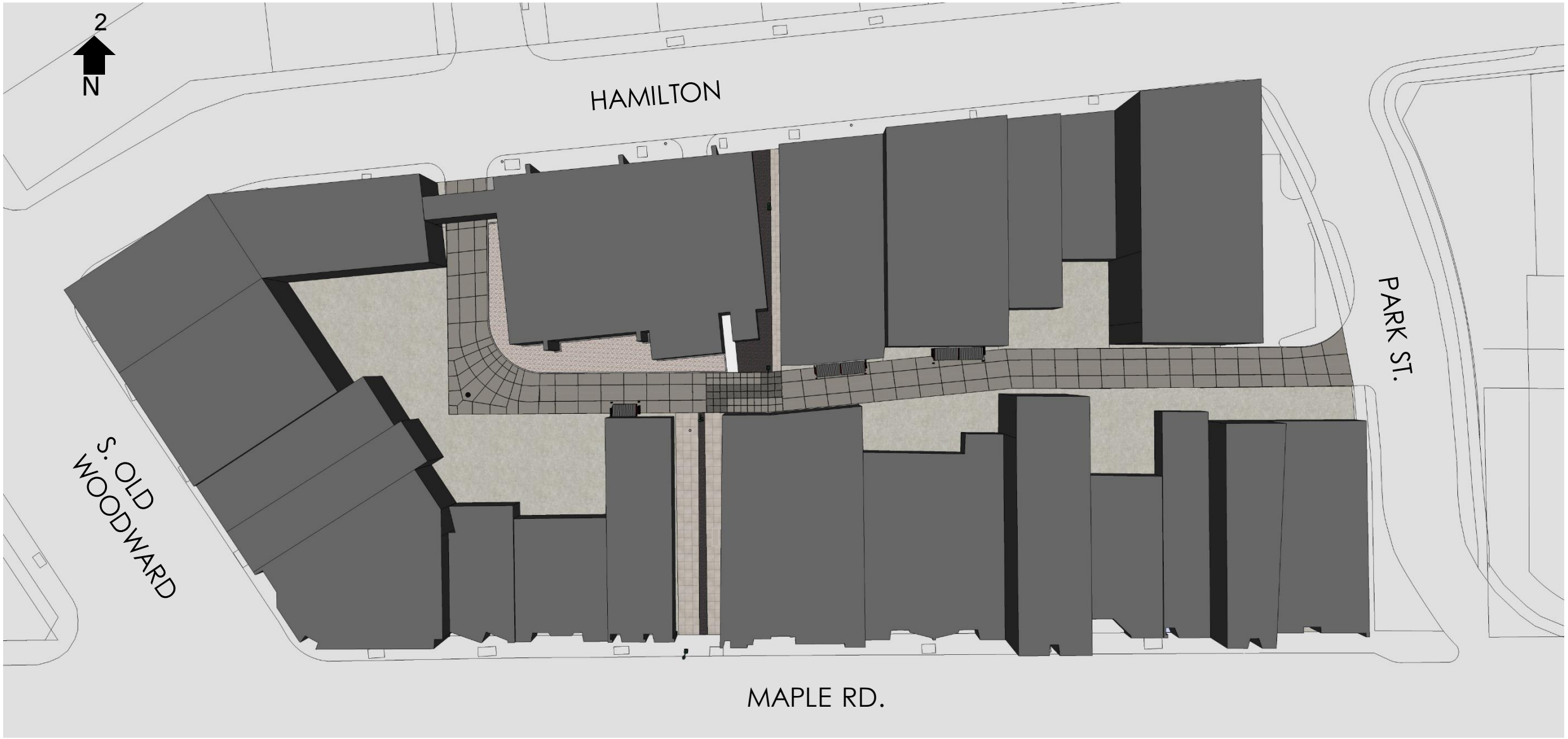

krieger klatt
ARCHITECTS
architecture interiors consulting

HAMILTON ALLEY

ALTERNATE CROSSWALK DESIGN #3

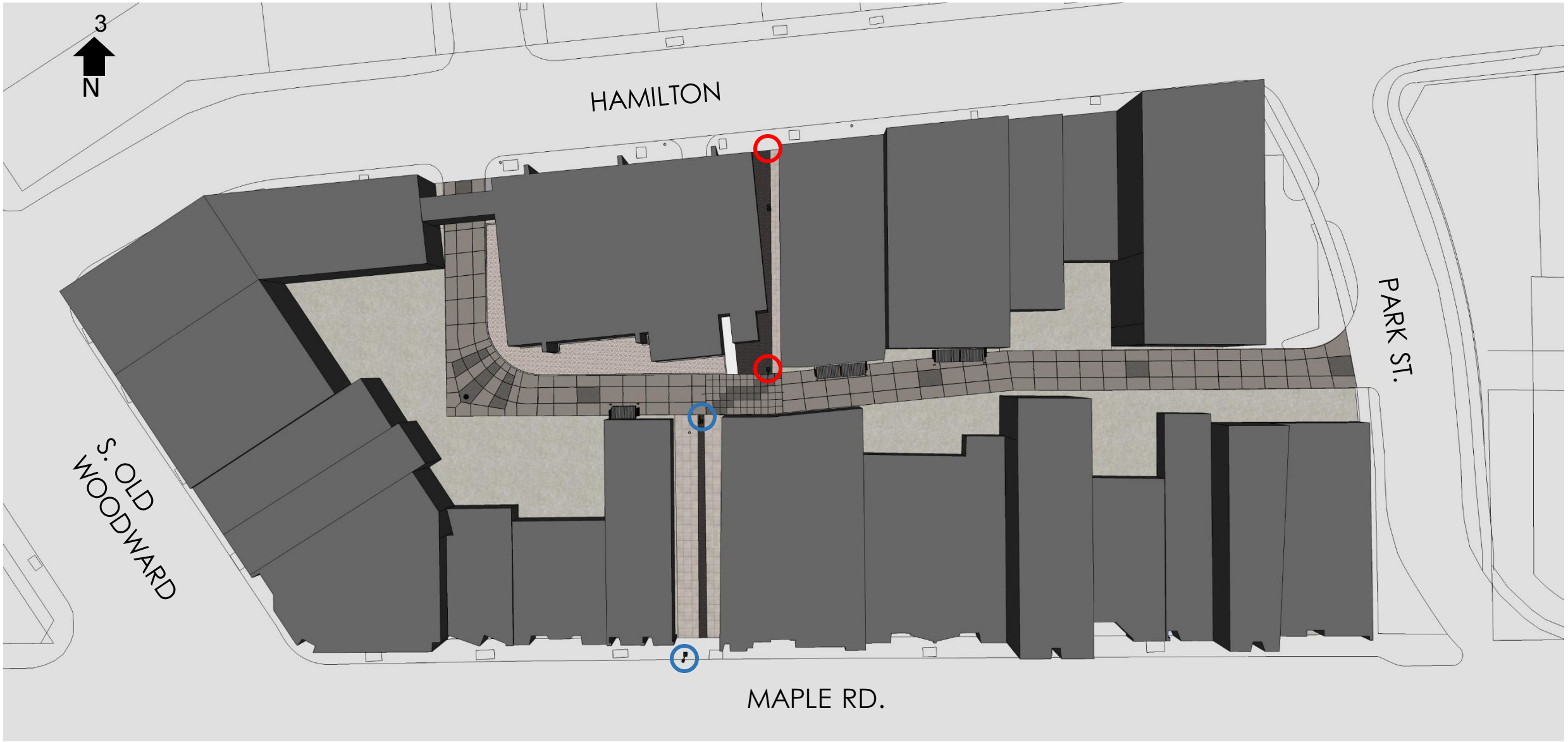

PROPOSED LOCATION OF STREET LIGHTS FOR VIA SIGNS

EXISTING STREET LIGHTS TO HAVE VIA SIGNS

krieger klatt ARCHITECTS
architecture interiors consulting

HAMILTON ALLEY

PROPOSED LOCATIONS OF VIA SIGNAGE

DUMPSTER SCREEN LOCATIONS

krieger klatt
ARCHITECTS
architecture interiors consulting

HAMILTON ALLEY

PROPOSED LOCATIONS OF DUMPSTER SCREENS

5

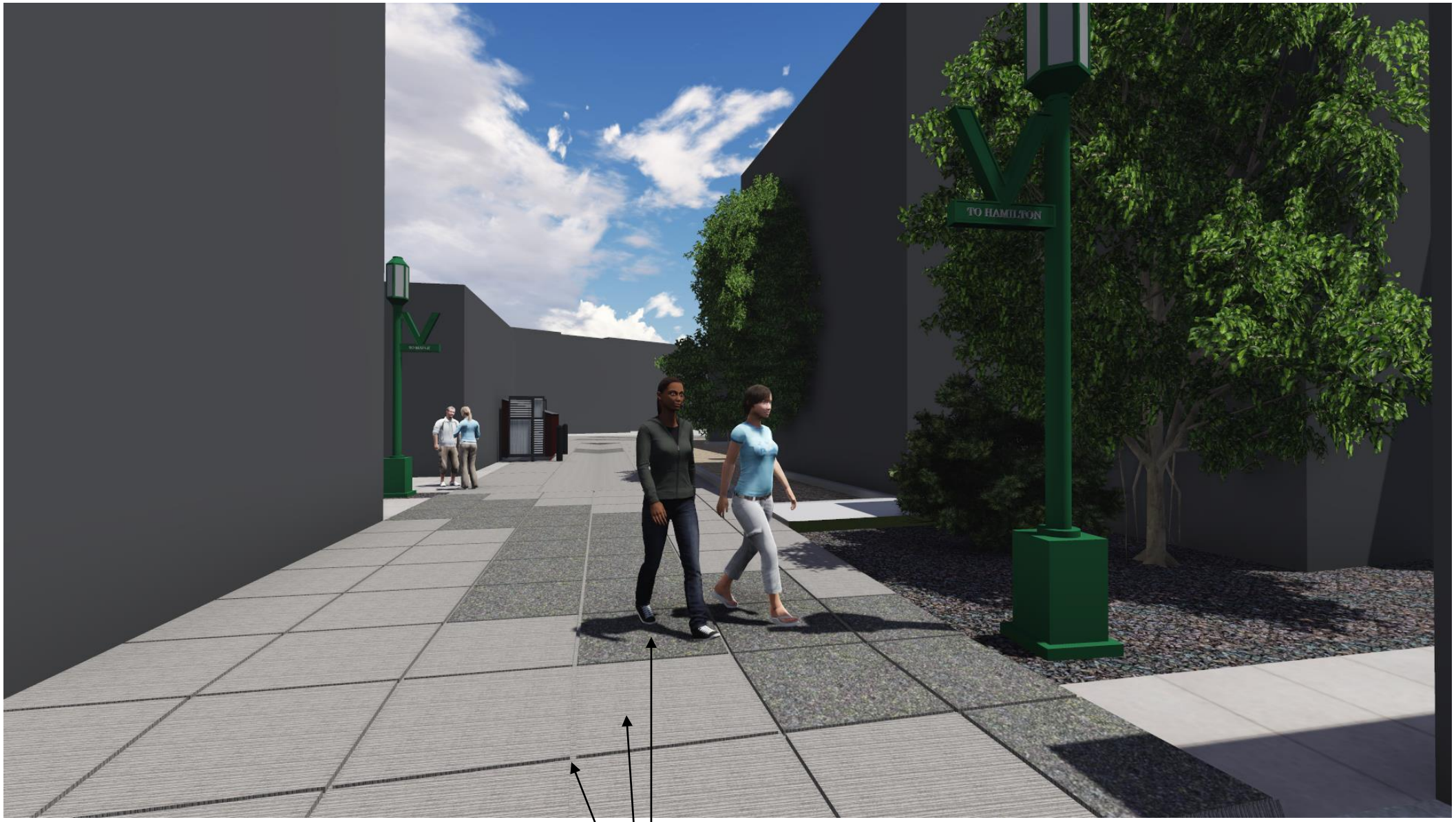

EXPOSED AGGREGATE CONCRETE

BROOM FINISHED CONCRETE

RAISED CROSSWALK CROSSING

krieger klatt
ARCHITECTS
architecture interiors consulting

HAMILTON ALLEY

PEDESTRIAN CROSSWALK

6

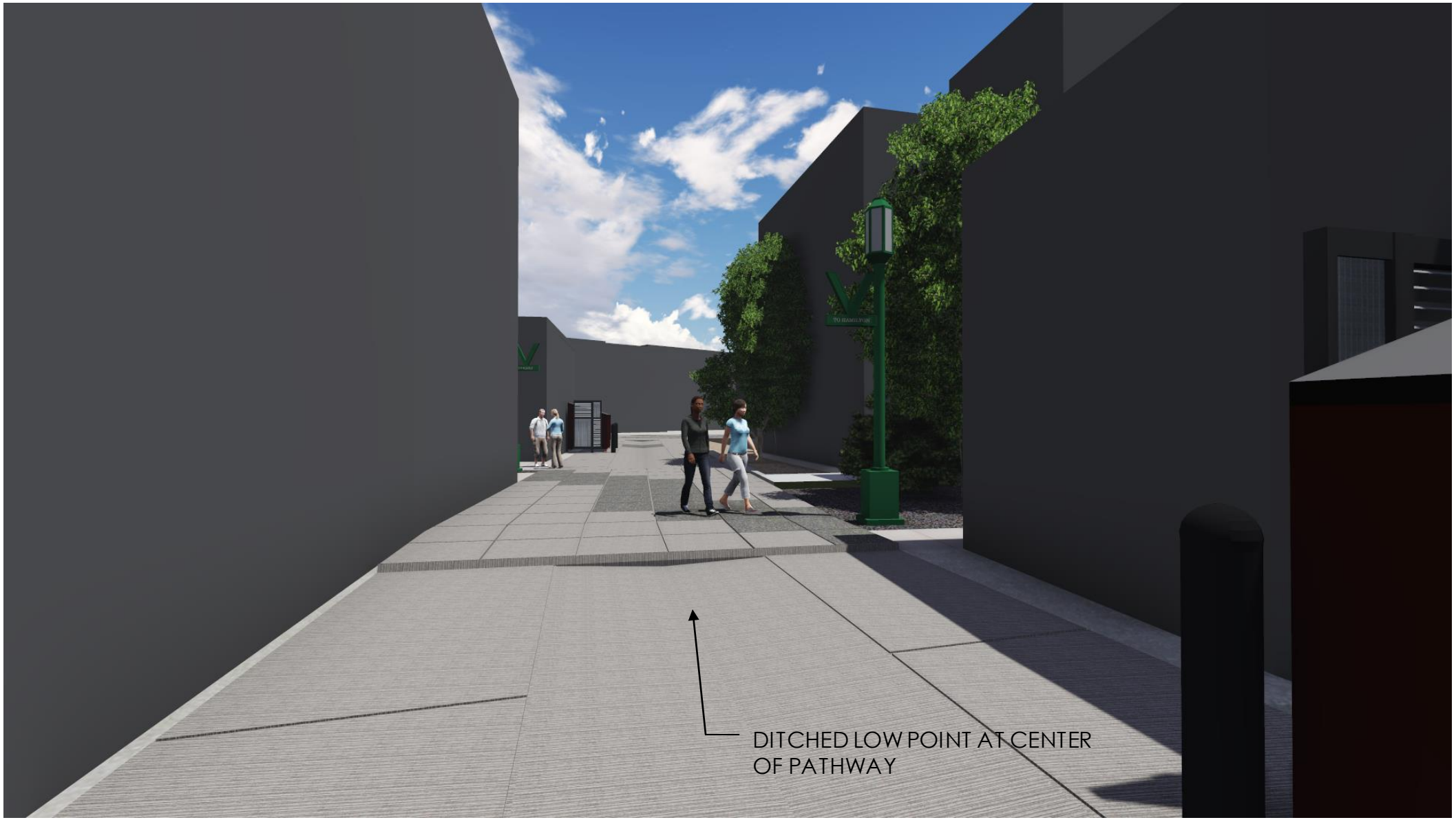

krieger klatt
ARCHITECTS
architecture interiors consulting

HAMILTON ALLEY

ALLEY PATHWAY

krieger klatt
ARCHITECTS
architecture interiors consulting

HAMILTON ALLEY

WAYFINDING SIGNAGE

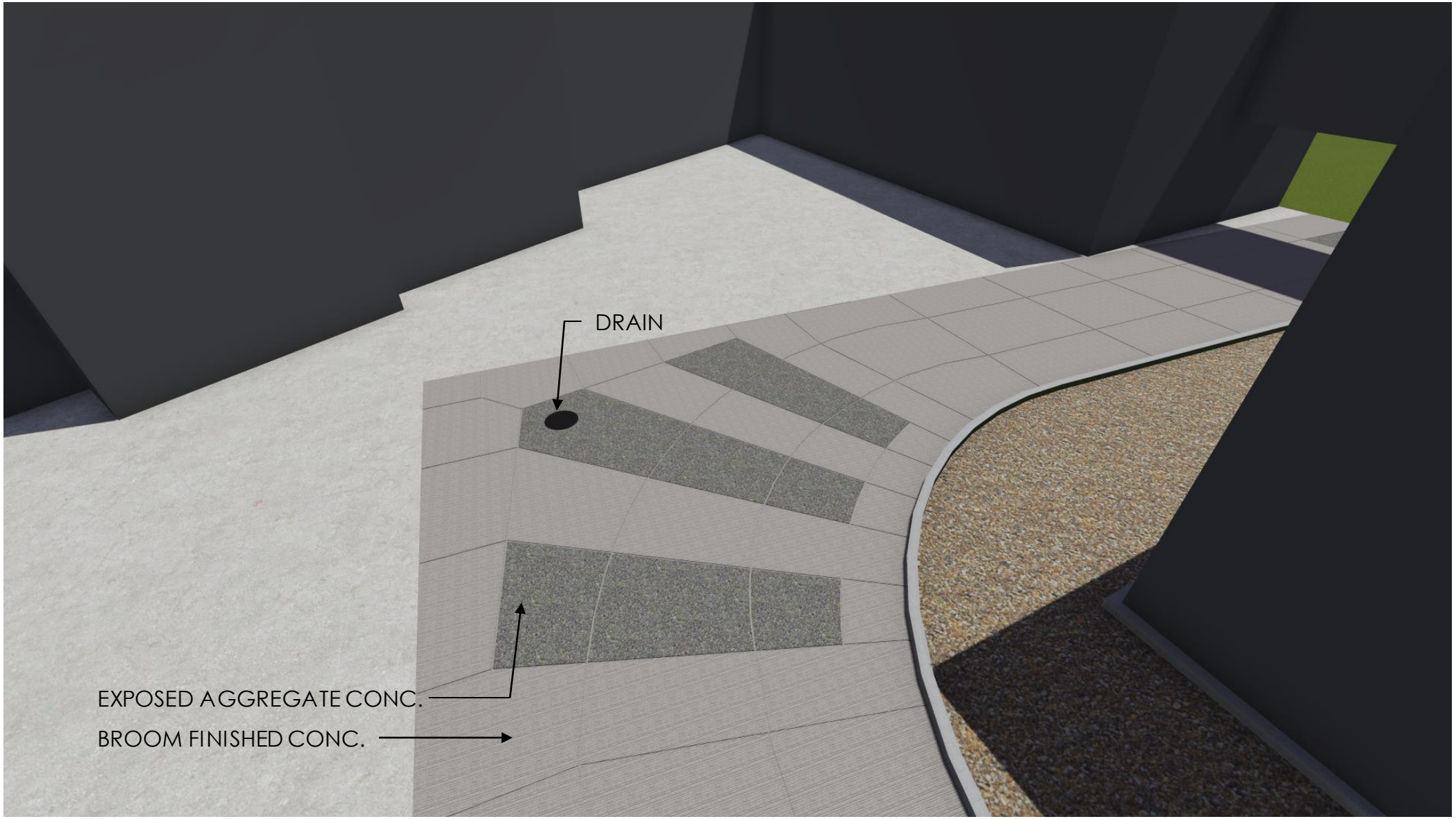

krieger klatt
ARCHITECTS
architecture interiors consulting

HAMILTON ALLEY

CURVE DESIGN

krieger klatt
ARCHITECTS
architecture interiors consulting

HAMILTON ALLEY

DUMPSTER SCREEN OPTION A

krieger klatt
ARCHITECTS
architecture interiors consulting

HAMILTON ALLEY

DUMPSTER SCREEN OPTION B

City of Birmingham
A Walkable Community

MEMORANDUM

Engineering Dept.

DATE: **October 31, 2014**

TO: **Joseph A. Valentine, City Manager**

FROM: **Paul T. O'Meara, City Engineer**

SUBJECT: **S. Hamilton Alley Reconstruction**
Hamilton Ave. to Park St.

At the meeting of September 22, 2014, a public hearing was held regarding the above potential project. Several interested property owners were present raising questions and concerns. At that time, it had been assumed that the pavement design would be modeled after what was built on the Willits Alley. However, the Commission made it clear that the pavement design need not follow what was done before. Direction was given to provide a design that is more practical, and reduces the amount of exposed aggregate. Direction was also given to obtain input from the Architectural Review Committee (ARC) and the Planning Board.

Before any drawings were prepared, a meeting of the ARC was held on October 3. Unapproved minutes of that meeting are attached. The ARC concurred that while this alley needs work, the design should focus on practicality. Opportunities for special emphasis should be given primarily at the point where the two north/south pedestrian pathways meet, and to a lesser extent, at the 90° bend. Accents at the two points where the alley meets City streets would also be appropriate, to help invite people into the area. The ARC endorsed the idea of using the Ron Rea designed "V" signs to help direct pedestrians through the area. They also helped provide ideas on how to screen the dumpster areas, given the tight space constraints.

Staff then hired Jason Kreiger, of Krieger Klatt Architects, to assist in the creation of a conceptual plan that could be presented to the Planning Board. The plans as prepared for the Planning Board are enclosed in this package, and labeled "Planning Board Submittal, October 22, 2014." The plan was reviewed by the Planning Board at their meeting of October 22. Unapproved minutes of that meeting are attached. Continuing with the theme provided by the City Commission and the Architectural Review Committee, the Planning Board comments can be summarized as follows:

- The use of exposed aggregate should be minimized more.
- The area of the pedestrian pathway should continue to be emphasized. Some liked the concept as shown, while others thought it needed refinement.
- The dumpster screens, while nice looking, may be problematic. Due to their size, and their fragile nature, the Planning Board was concerned that they would be damaged by impact. It was suggested that they be reduced in size (smaller than the actual dumpsters being screened).
- The "Via" sign design was endorsed. There was not a consensus on what the signs should say.

Given the comments of the Planning Board, staff worked with the architect to refine the plan. The first attachment, labeled "City Commission Submittal, November 10, 2014" represents the plan as now presented. The following points are prepared to better explain what is proposed references to Sheet numbers correlate with the pdf sheet numbers in this package):

1. Sheets 23 and 24 of the conceptual plan set depict two variations on the joint pattern design. Both have the following characteristics:
    - Minimal use of the exposed aggregate, except at the junction of the pedestrian pathways, at the 90° bend, and at the point where the alley meets a City street.
    - At the junction of the pedestrian pathways, a smaller 3 ft. square grid pattern has been introduced. The smaller pattern attempts to match the theme being used on all new sidewalks in the downtown area, including the previously built "Social" pathway to the south, and the proposed "Commonwealth" pathway to the north.

    In the area where the sidewalk grid pattern is used, sheet 1 shows a diagonal themed exposed aggregate to direct pedestrians through this area. Sheet 24 uses more of a straight line approach. Staff would appreciate the Commission's input as to which is preferable.
2. Sheet 25 highlights the proposed locations for the "Via" signs. The pedestrian pathway to the south has already been constructed, and street lights have been placed at both of its ends in such a way that a "V" sign can be constructed and mounted to it as a part of the project. These lights are designated with a blue circle. The "V" signs could be manufactured and installed as a part of the 2015 project. The pedestrian pathway to the north is old and needs to be reconstructed to match current pavement standards. The two existing street lights in this area also need to be updated and relocated. Hamilton Ave. is budgeted for complete reconstruction just one year later, in 2016. At that time, all of its street lights will also be updated and relocated as needed to meet current standards. Since no street light work is contemplated in the 2015 alley project, it would be more efficient to wait on the reconstruction of this path until 2016. Once that work is finished, and new street lights have been located in the appropriate locations (designated by the red circles), two additional "V" signs could be installed at that time.
3. Sheet 26 depicts the three locations where dumpsters currently are placed in significant numbers in the alley. It is proposed to install the dumpster screens as shown at both ends of these three yellow areas, for a total of six screens.
4. Sheets 27 & 28 depicts the junction of the pathways in 3D. As was discussed at the last Commission meeting, the new alley pavement will generally be graded such that there is a low point in the middle, keeping water flowing away from the buildings, and into drains located in the center of the alley. Based on comments from the Planning Board, we plan to implement a different grading scheme in the area where the sidewalk sized joints are installed. The crosswalk would have a raised feel to it, which will encourage vehicles to slow down through this area, and further help direct pedestrians walking north or south to the other pathway.
5. Sheet 29 details the proposed "V" signs. If this concept is approved, staff will work with a sign manufacturer to prepare an appropriate specification for these signs that can be used on this project, as well as into the future. The signs will be attached to a standard City street light post, and made of materials for a long service life. Please see Appendix A for a further discussion on what the signs should say.

6. Sheet 30 details the area of the 90° bend. Additional right-of-way in this area provides an opportunity to create some architectural interest here. Note that other design ideas were considered for this area. However, this one was favored because it follows standard joint design constraints that must be considered if the concrete is going to have a long service life. For example, if circular patterns are introduced, it would result in odd shaped concrete panels that would likely crack soon after construction, and ultimately become maintenance problems.
7. Sheets 31 & 32 detail two different design schemes for the metal louvered dumpster screens. Like the "V" signs, if this concept is approved, staff will have to work with a fence manufacturer to develop specifications for the screens. They have been designed to be anchored to the ground using one steel post with a footing. They would be installed with a small gap from the adjacent building walls, so they are not reliant on the building for support. That way, if the owner needs to perform maintenance on the exterior of the wall, the screen can remain in place. Staff is also exploring the idea of a community trash compacting station, located on private property. We are seeking input from three different owners, one of which has expressed interest so far. Please see Appendix B for additional details on our proposed funding and maintenance mechanisms.

The simplified concrete design has helped reduce the overall estimated project cost to $196,000, based on a unit cost of $200 per front foot. The project cost includes the cost of the "V" signs to be made and installed for this project. It does not include the cost of the dumpster screens. A revised suggested assessment roll is included for your reference.

If the Commission endorses the conceptual plans as now prepared, we propose to put together a cover letter that will cover the plan highlights and estimated cost, directions on how to see the concept plans on the City's website, and an invitation to an upcoming public hearing. A Suggested Resolution is provided below.

SUGGESTED RESOLUTION:

To receive the conceptual drawings as prepared by Kreiger Klatt Architects reflecting previous direction from the City Commission, the Architectural Review Committee, and the Planning Board, regarding the reconstruction of the S. Hamilton Alley, from Hamilton Ave. to Park St., using the concrete joint pattern at the junction of the pathways as featured in Sheet _?_(23 or 24) of the plans, and to adopt the following resolution:

RESOLVED, That this Commission shall meet on Monday, December 8, 2014, at 7:30 P.M., for the purpose of conducting a public hearing of necessity for the improvement proposed herein.

FURTHER RESOLVED, if necessity is determined on December 8, a hearing to review the assessments and to confirm the roll will be held on January 12, 2015, at 7:30 P.M.

APPENDIX A

PROPOSED "V" SIGNS FOR
PEDESTRIAN PASSAGEWAY DEMARCATION AND DIRECTION

Conceptual plans (attached) were prepared by Ron Rea as a part of the City's Alleys and Passageways Plan. Since then, we have determined that the cost of installation and operation can be greatly reduced if they do not have an electrical component, and if they are installed on existing street lights. We intend to work with a sign manufacturer to help prepare a specification for these signs that can then be bid out as a part of the reconstruction contract.

Staff will need direction on what the purpose and the signs should be. Some have maintained that they are directional signs to help pedestrians understand that this is a public passageway, and that it will take you to a destination. Others have maintained that they should serve as a means to help identify particular alleys (or passageways). Here are two proposed scenarios. Referring to Page 3 of the latest conceptual drawings, the Via sign locations can be numbered 1 through 4, starting from the most northerly location, and then following south (#1 would be the sign on Hamilton Ave., #2 would be the sign at the south end of the "Commonwealth" passageway, etc.).

<u>DIRECTIONAL SIGNS</u>

If the signs are used as directional signs to the nearest street, they could read as follows:

#1 – TO MAPLE RD.
#2 – TO HAMILTON AVE.
#3 - TO MAPLE RD.
#4 - TO HAMILTON AVE.

<u>IDENTIFICATION SIGNS</u>

If the signs are used as identification signs, they could read as follows:

#1 – COMMONWEALTH VIA
#2 – TO HAMILTON AVE.
#3 – TO MAPLE RD.
#4 – SOCIAL VIA

<u>DIRECTIONAL/IDENDITIFICATION SIGNS</u>

A hybrid of the two concepts could also be used:

#1 – TO S. HAMILTON VIA
#2 – TO HAMILTON AVE.
#3 – TO MAPLE RD.
#4 – TO S. HAMILTON VIA

We would appreciate input from the City Commission as to which message is preferable.

APPENDIX B

SPECIAL ASSESSMENT PROCEDURE FOR DUMPSTER SCREENS

Previous discussions regarding dumpster management in this alley have included the suggestion that the City should encourage the implementation of a community trash compacting station. Staff is currently attempting to start conversations with three different property owners in the immediate area that have a potential site for such a dumpster installation. It is not clear whether this effort will produce an actual working dumpster station (although one has expressed interest). In the meantime, assuming that the dumpsters may well remain in their present locations, we think it is important to proceed with the suggested dumpster screen idea.

We are currently proposing the installation of six dumpster screens. It is unclear what the cost of the screens will be, but we are using the estimated price of $2,000 each for the purposes of discussion.

The dumpsters placed in the right-of-way are benefitting particular property owners. The cost of the screens should be assessed to those particular parties. If this concept is approved, staff will interview and discuss the screen concept with the owners that have them sitting adjacent to their buildings. Some dumpster areas involve just one business, while others involve more than one. We will try to determine how best to split these costs among those properties that are using these dumpsters and add it to their base assessment. Information regarding this procedure would be included in the announcement for the special assessment.

Once the screens are installed, there will be potential maintenance costs in the future. It is hoped that the current design (reduced in size, and guarded with a post) will not be easily susceptible to being damaged when it is hit by a vehicle. However, it is still possible that they will be damaged at some point. There will also come a time when they need to be cleaned or painted to bring them back to their original appearance. We assume these activities would likely have to be initiated by City staff. Not knowing the costs involved to maintain the screens, we recommend that the method of paying for repairs or maintenance be determined in the future as needed, with the idea that the City may be able to pay for some costs out of general funds. However, when appropriate, the owners should be aware that they may also receive invoices in the future for maintenance of the screens, as needed. The latter approach may encourage them to also initiate maintenance and repairs on their own, which would be appreciated.

If the Commission has suggestions or modifications to these ideas, they are requested at this time.

City of Birmingham
A Walkable Community

DRAFT – NOT APPROVED

Architectural Review Committee

City Hall Conference Room 202
151 Martin St.
248.530.1880
Friday, October 3, 2014

Meeting called to order at 8:30 am.

Present: Larry Bertollini, Scott Bonney, Christopher Longe
City Staff: Joe Valentine, City Manager
Paul O'Meara, City Engineer
Jana Ecker, City Planner
Amanda Thomas, Management Analyst

Approval of the meeting notes from June 30, 2014.
Motion by Longe, seconded by Bonney.
3 yeas, 0 nays.

On-site visit to Hamilton Alley canceled due to rain.

Mr. Valentine, Mr. O'Meara and Ms. Ecker briefly introduced the Hamilton Alley proposed improvement project and the issues that the City is facing in regards to property and business owners.

The committee reviewed and discussed the current alley plans.

Mr. Longe left the meeting at 9:04 am.

Following the discussion, Mr. Bonney motioned for the committee to make the following recommendations for further consideration:

Alley Pavement Design -
Consider Social and Commonwealth alleys in the design of the alley plan. Use aggregate walkways to connect these two alleys, but minimize aggregate throughout the parts of the alley not used by pedestrians.
Dumpster Locations -
Add panels to existed dumpster sites at locations on public property. Consider adding landscaping to the sides of panels where the dumpsters sit.
Enhance the existing conditions-
Improve lighting in walkways, while also enhancing and drawing attention to focal points. Add art elements at terminating vistas and overhead buildings, and add vista signs with street names.

Motion by Bonney, seconded by Bertollini.
2 yeas, 0 nays.

Meeting was adjourned at 9:58 am.

Manager's Directives Resulting from Architectural Review Committee Meeting of October 3, 2014:

1. To direct the Engineering Department to proceed with the design, incorporating the concepts as discussed by the Architectural Review Committee, including:

   Alley Pavement Design -
   Consider Social and Commonwealth alleys in the design of the alley plan. Use aggregate walkways to connect these two alleys, but minimize aggregate throughout the parts of the alley not used by pedestrians.

   Dumpster Locations -
   Add panels to existed dumpster sites at locations on public property. Consider adding landscaping to the sides of panels where the dumpsters sit.

   Enhance the existing conditions-
   Improve lighting in walkways, while also enhancing and drawing attention to focal points. Add art elements at terminating vistas and overhead buildings, and add vista signs with street names.

PLANNING BOARD SUBMITTAL

OCTOBER 22, 2014

krieger klatt
ARCHITECTS
architecture interiors consulting

HAMILTON ALLEY

OVERALL ALLEY DESIGN

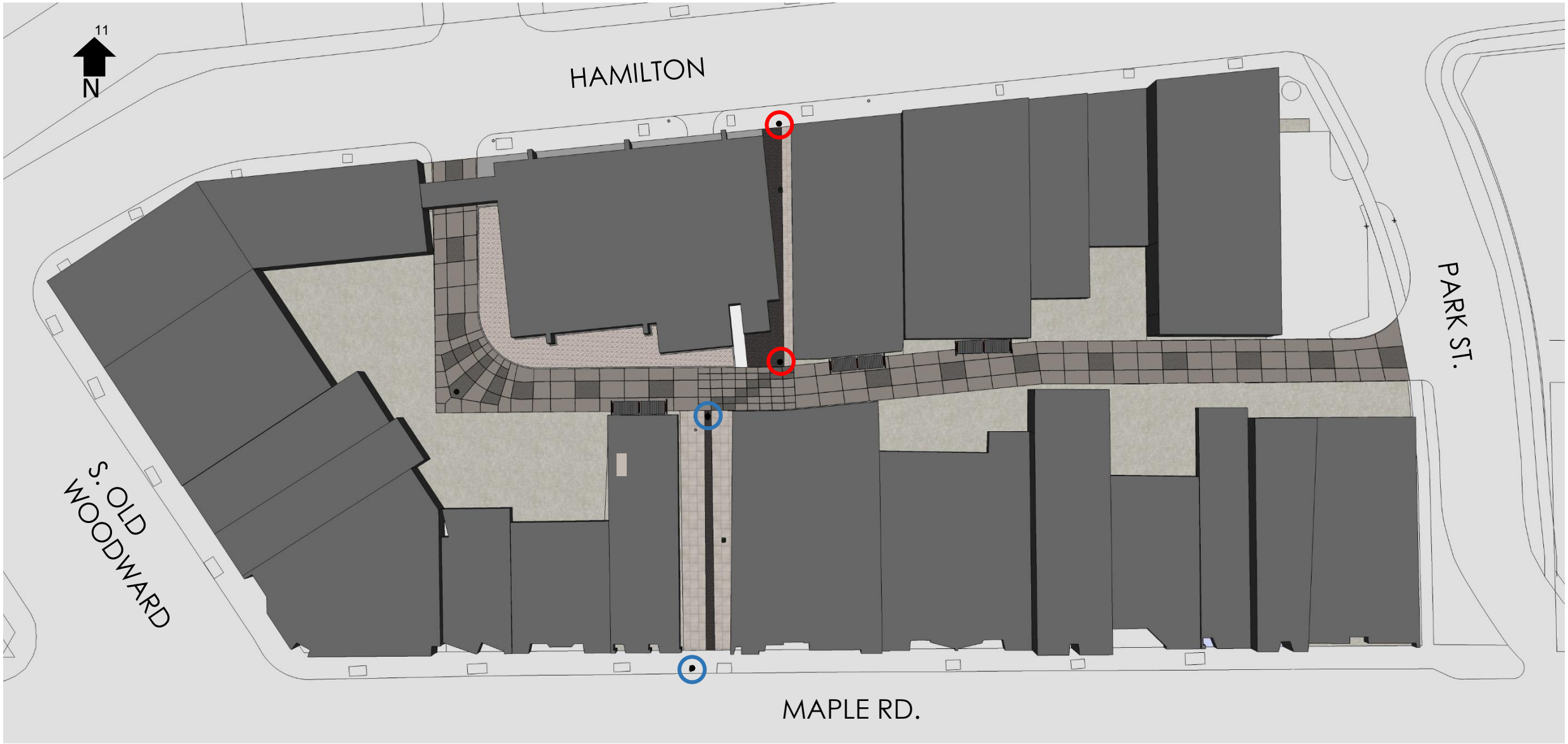

PROPOSED LOCATION OF STREET LIGHTS FOR VIA SIGNS

EXISTING STREET LIGHTS TO HAVE VIA SIGNS

krieger klatt ARCHITECTS
architecture interiors consulting

HAMILTON ALLEY

PROPOSED LOCATIONS OF VIA SIGNAGE

DUMPSTER SCREEN LOCATIONS

krieger klatt
ARCHITECTS
architecture interiors consulting

HAMILTON ALLEY

PROPOSED LOCATIONS OF
DUMPSTER SCREENS

EXPOSED AGGREGATE CONCRETE

BROOM FINISHED CONCRETE

krieger klatt
ARCHITECTS
architecture interiors consulting

HAMILTON ALLEY

PEDESTRIAN CROSSWALK

krieger klatt
ARCHITECTS
architecture interiors consulting

HAMILTON ALLEY

WAYFINDING SIGNAGE

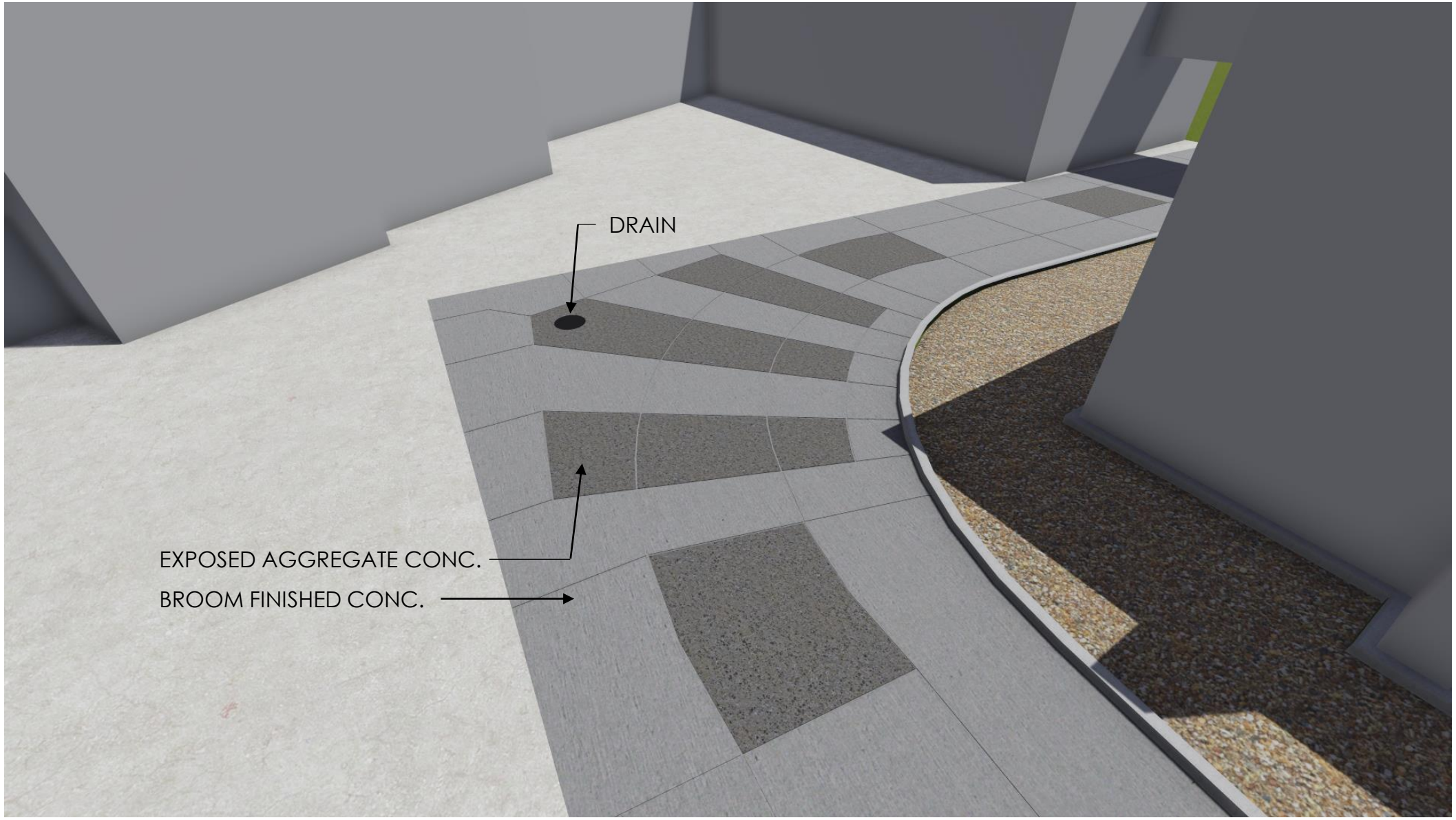

krieger klatt
ARCHITECTS
architecture interiors consulting

HAMILTON ALLEY

CURVE DESIGN

krieger klatt
ARCHITECTS
architecture interiors consulting

HAMILTON ALLEY

DUMPSTER SCREEN OPTION A

krieger klatt
ARCHITECTS
architecture interiors consulting

HAMILTON ALLEY

DUMPSTER SCREEN OPTION A (SMALL)

krieger klatt
ARCHITECTS
architecture interiors consulting

HAMILTON ALLEY

DUMPSTER SCREEN OPTION B

CITY OF BIRMINGHAM
REGULAR MEETING OF THE PLANNING BOARD
WEDNESDAY, OCTOBER 22, 2014
City Commission Room
151 Martin Street, Birmingham, Michigan

Minutes of the regular meeting of the City of Birmingham Planning Board held October 22, 2014. Chairman Scott Clein convened the meeting at 7:30 p.m.

Present: Chairman Scott Clein; Board Members Bert Koseck, Gillian Lazar, Janelle Whipple-Boyce, Bryan Williams; Student Representative Shelby Wilson

Absent: Board Members Carroll DeWeese, Robin Boyle; Student Representative Jack Moore

Administration: Matthew Baka, Senior Planner
Brendan Cousino, Asst. City Engineer
Jana Ecker, Planning Director
Paul O'Meara, City Engineer
Carole Salutes, Recording Secretary

10-158-14

APPROVAL OF THE MINUTES OF THE REGULAR PLANNING BOARD MEETING HELD OCTOBER 8, 2014

Mr. Williams
Page 2 - Second paragraph from the bottom, replace "intension" with "intention." Add the sentence "At this time Mr. Williams left the meeting."

Motion by Ms. Whipple-Boyce
Seconded by Mr. Williams to approve the Minutes of the regular Planning Board meeting on October 8, 2014 as amended.

Motion carried, 5-0.

VOICE VOTE
Yeas: Whipple-Boyce, Williams, Clein, Koseck, Lazar
Nays: None
Absent: DeWeese

10-159-14

CHAIRPERSON'S COMMENTS (none)

DRAFT

10-160-14

APPROVAL OF THE AGENDA

Ms. Ecker reported that the applicants for Final Site Plan Review and Special Land Use Permit ("SLUP") review for 820 E. Maple Rd., All Seasons Senior Living, Request for Economic Development License, have asked for postponement.

Motion by Mr. Williams
Seconded by Ms. Whipple-Boyce to postpone the SLUP and Final Site Plan Review for 820 E. Maple Rd. to December 10, 2014.

Motion carried, 4-0.

VOICE VOTE
Yeas: Williams, Whipple-Boyce, Koseck, Lazar
Nays: None
Abstain: Clein
Absent: DeWeese

10-161-14

COURTESY REVIEW
South Hamilton Alley Improvement

Mr. O'Meara informed the board that the architect, Mr. Jason Krieger, Krieger Klatt Architects, was present. Mr. O'Meara recalled that during the budget hearing for the FY 2014/2015 City budget, the City Commission asked the Engineering Dept. to consider reconstructing the alley that runs between Hamilton Ave. and E. Maple Rd. The alley is generally an 18 ft. wide strip of land, although it widens out at the 90° bend located south of the Hamilton Ave. entrance.

The existing pavement is in poor condition. There are some areas that have been patched in the past, but the majority of the alley still has the original 1929 pavement in place. The sewer has not been studied, but it is expected that it likely needs to be enlarged.

Pursuant to the City Commission's direction a meeting was held on September 11, 2014 to allow the property owners and tenants to meet with Engineering Dept. staff to discuss the project prior to the public hearing. In general, the comments from the people who attended the meeting were concerns about the cost and duration of the project, and that this is not a good alley to try to turn into a pedestrian environment because of its necessary service nature and high amount of traffic. Therefore, exposed aggregate may not be the best material to use in high amounts. Those present generally noted support for the reconstruction of the sewers, and improving the drainage in the alley.

The Architectural Review Committee also looked at this and offered several suggestions. Mr. Krieger worked with those concepts came up with a design that put some exposed aggregate in the middle of the 18 ft. wide strip of concrete.

DRAFT

“Via” signs following the conceptual drawings of Ron and Roman Architects will be partially implemented. The signs will be simplified by not adding electricity and mounting them underneath the street light. There may be an opportunity to name the alley through the Via signs.

There are three main areas where dumpsters are currently placed. Patterned metal screens can be installed adjacent to the dumpsters to help block the view of them and add some architectural interest on the sides. Mr. Krieger explained the screens will be permanently attached to the ground with footings.

Mr. Koseck thought in this particular via it would be much more practical to use concrete. Beautify it in the N/S axis as proposed. Chairman Clein liked the plan because it is a nice balance between the practical and the ornate. Ms. Whipple-Boyce believed the most important distinction in the concrete should be the connection between the two alleys that run north and south. As for the other, she wouldn’t waste the money on aggregate. She was worried the dumpster panels would be hit and damaged. She hoped to see the name of the passageway on the via sign. Mr. Williams said he would significantly highlight the N/S passageways from Hamilton all the way to Maple Rd. and not E/W. Mr. Koseck added that signage, lighting, and pavement patterns can direct people so they don’t get lost.

Mr. O’Meara advised the N/S Commonwealth passage is planned for 2016. Complete reconstruction of an alley is typically funded by special assessment. The City Commission can authorize a special assessment district after taking input from the property owners, if it declares the project a necessity.

10-162-14

SPECIAL LAND USE PERMIT ("SLUP")
PRELIMINARY SITE PLAN REVIEW
2200 Holland St.
Mercedes-Benz of Bloomfield Hills Prep and Storage Facility
New construction of a one-story building 16,400 sq. ft. in size for the cleaning, detailing, light repair and storage of vehicles (postponed from September 10 2014 - request by applicant to postpone to October 22, 2014)

Mr. Baka advised the subject property located at 2200 Holland St. currently contains five warehouse structures. The applicant proposes to demolish all of the existing buildings and construct a single warehouse building that will be 16,400 sq. ft. and will be used as the auto prep and storage facility for the Mercedes-Benz of Bloomfield Hills dealership.

The proposed building will have the capacity to store 100 cars. All uses over 6,000 sq. ft. in the MX District are required to obtain a SLUP. Accordingly, the Planning Board will perform the Preliminary and Final Site Plan Reviews for the project and then make a recommendation to the City Commission on whether or not to approve the proposal for a SLUP.

CITY COMMISSION SUBMITTAL

NOVEMBER 10, 2014

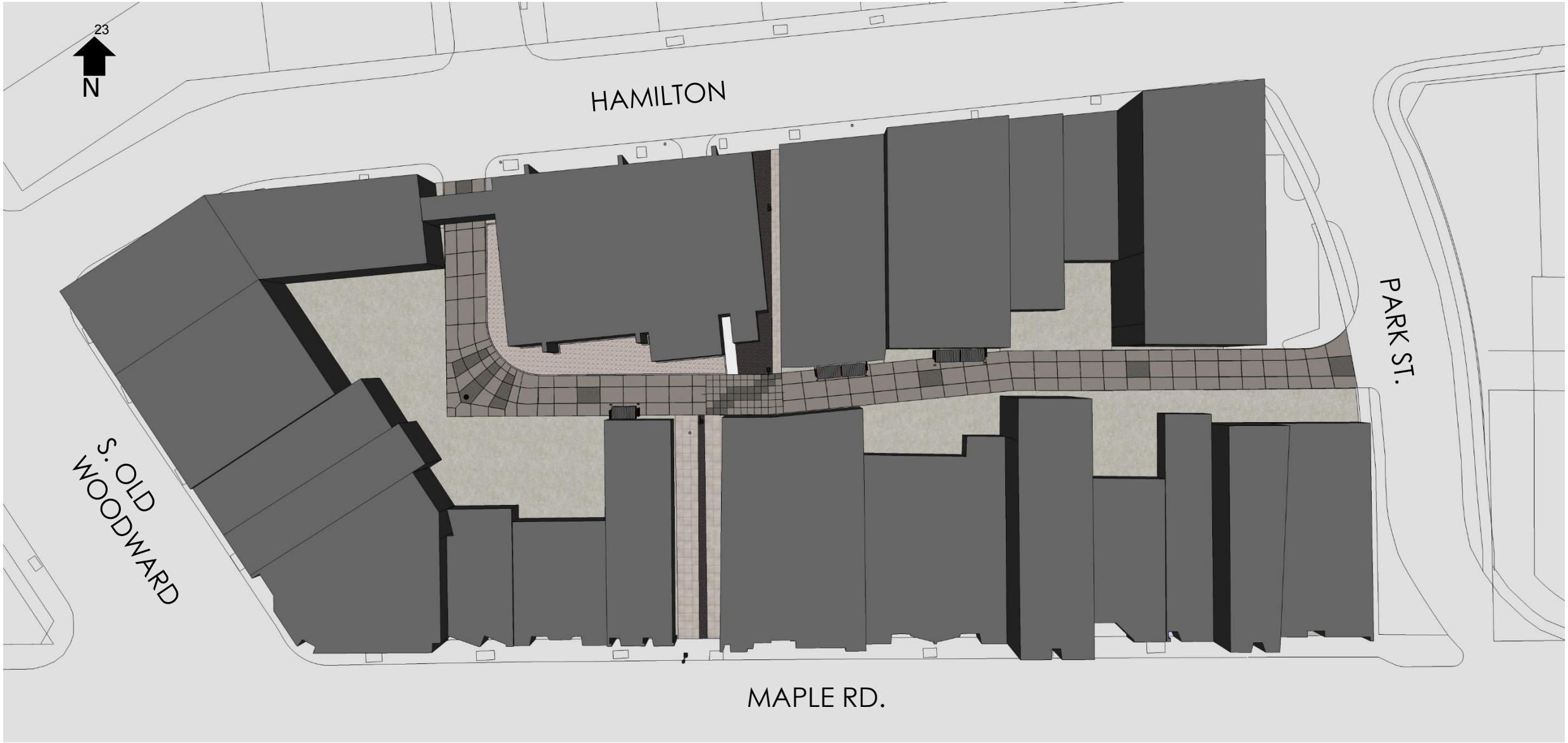

krieger klatt
ARCHITECTS
architecture interiors consulting

HAMILTON ALLEY

OVERALL ALLEY DESIGN

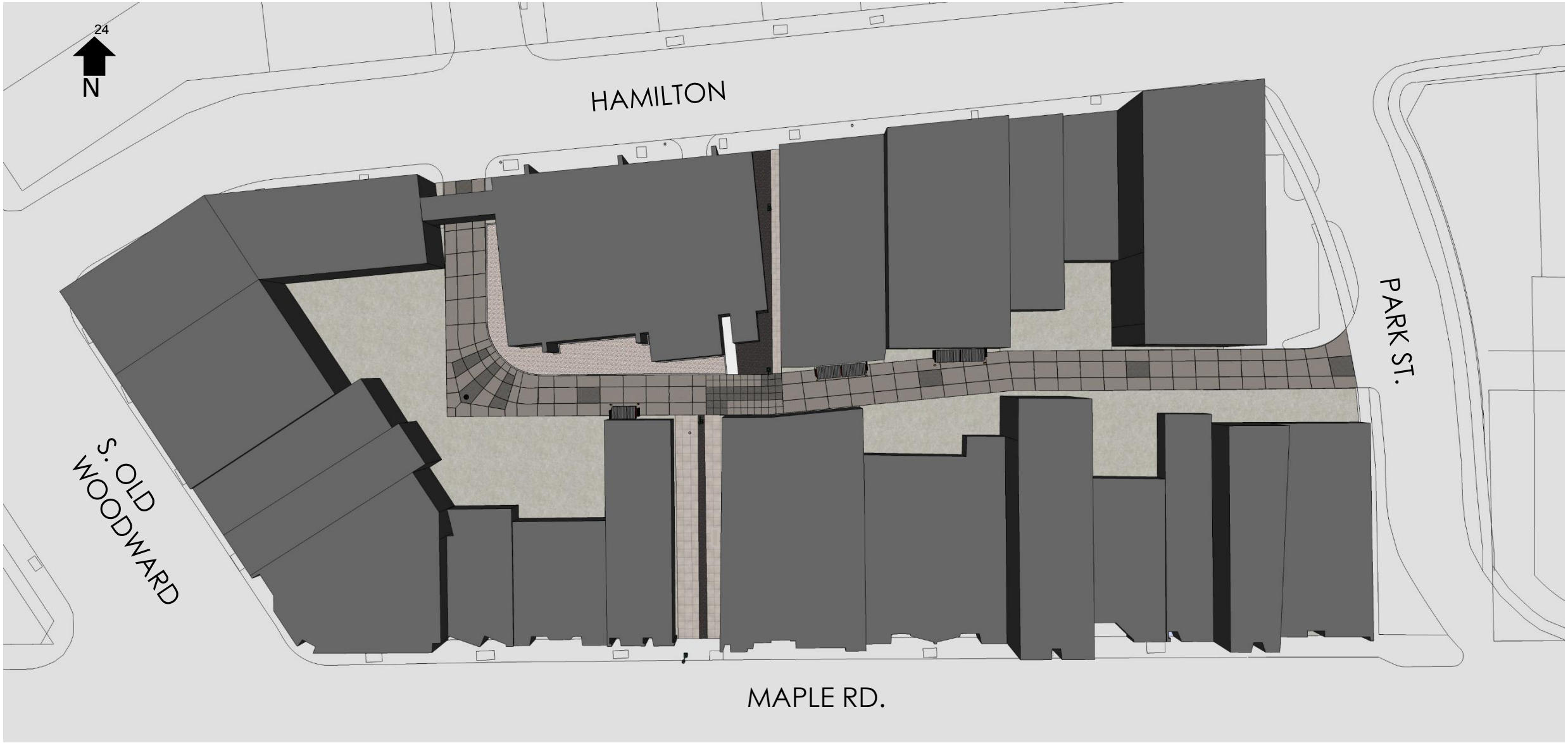

krieger klatt
ARCHITECTS
architecture interiors consulting

HAMILTON ALLEY

ALTERNATE CROSSWALK DESIGN

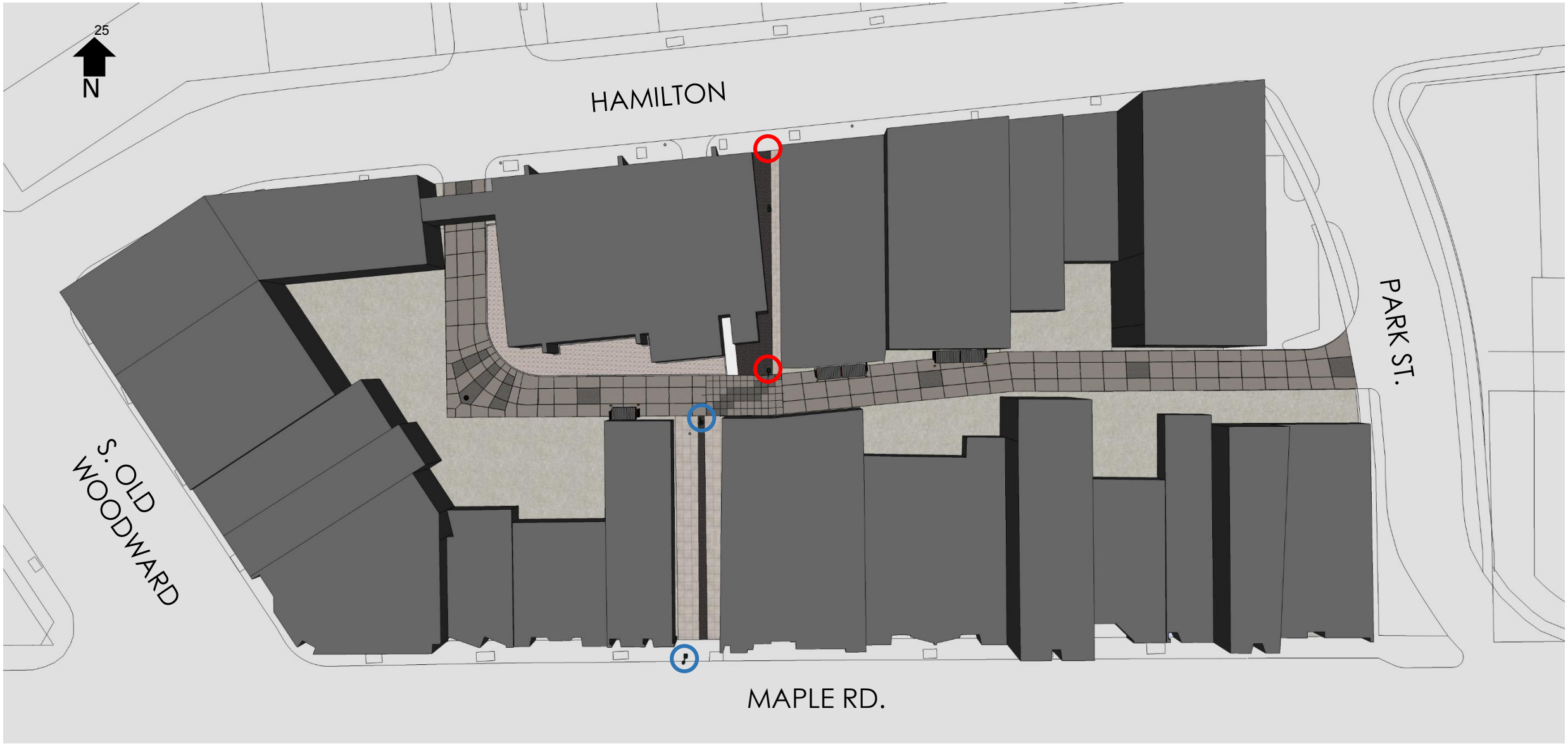

PROPOSED LOCATION OF STREET LIGHTS FOR VIA SIGNS

EXISTING STREET LIGHTS TO HAVE VIA SIGNS

krieger klatt ARCHITECTS
architecture interiors consulting

HAMILTON ALLEY

PROPOSED LOCATIONS OF VIA SIGNAGE

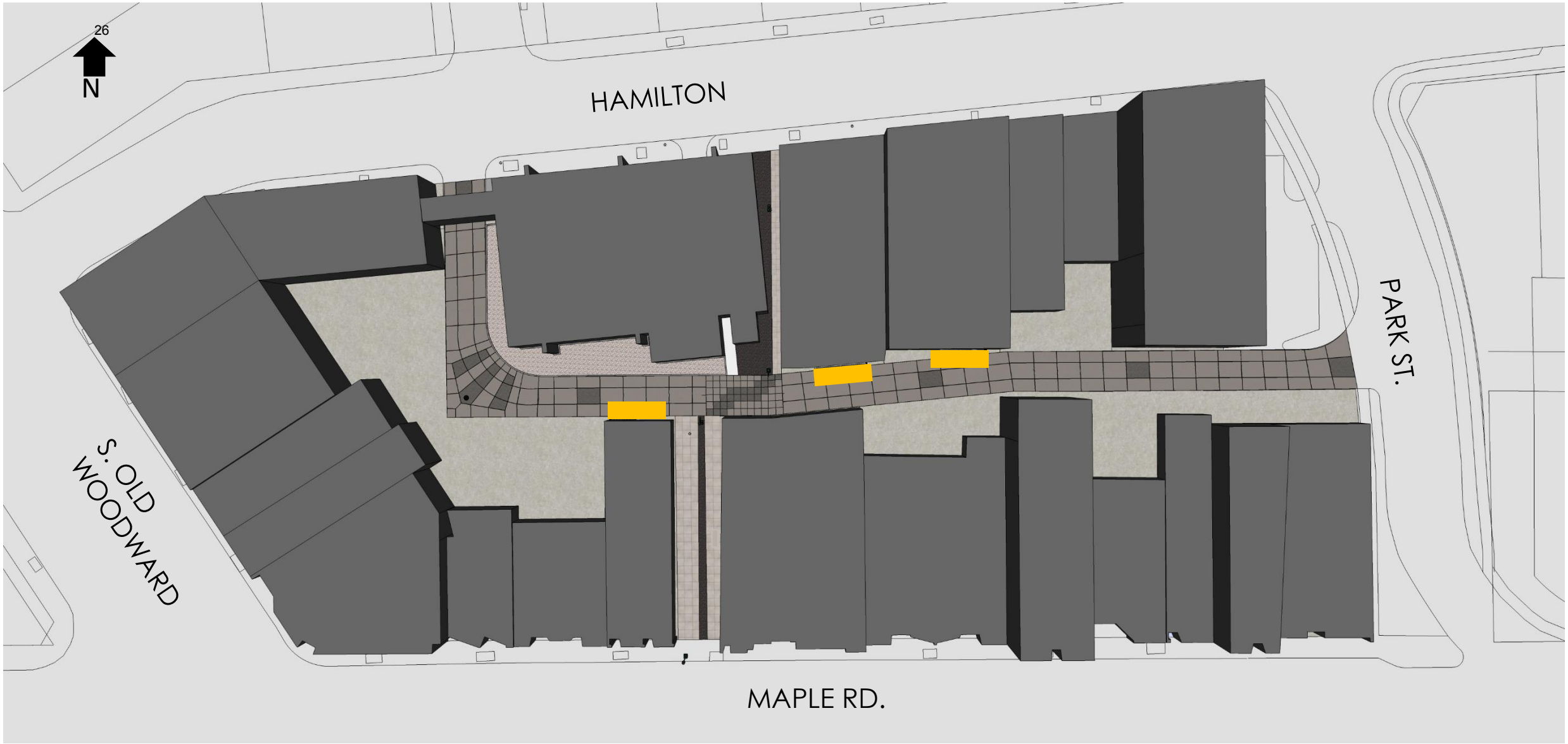

DUMPSTER SCREEN LOCATIONS

krieger klatt
ARCHITECTS
architecture interiors consulting

HAMILTON ALLEY

PROPOSED LOCATIONS OF
DUMPSTER SCREENS

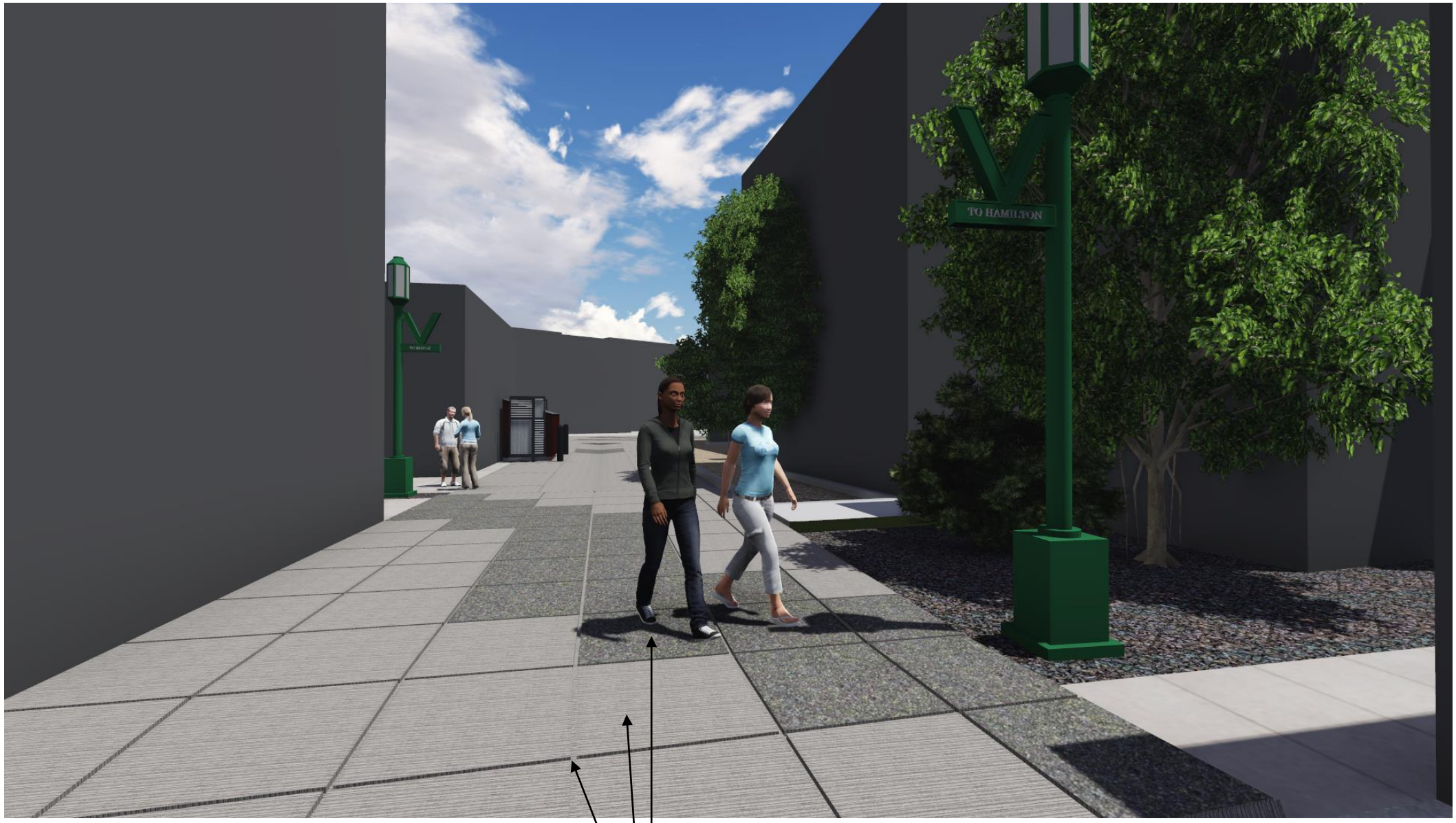

EXPOSED AGGREGATE CONCRETE

BROOM FINISHED CONCRETE

RAISED CROSSWALK CROSSING

krieger klatt
ARCHITECTS
architecture interiors consulting

HAMILTON ALLEY

PEDESTRIAN CROSSWALK

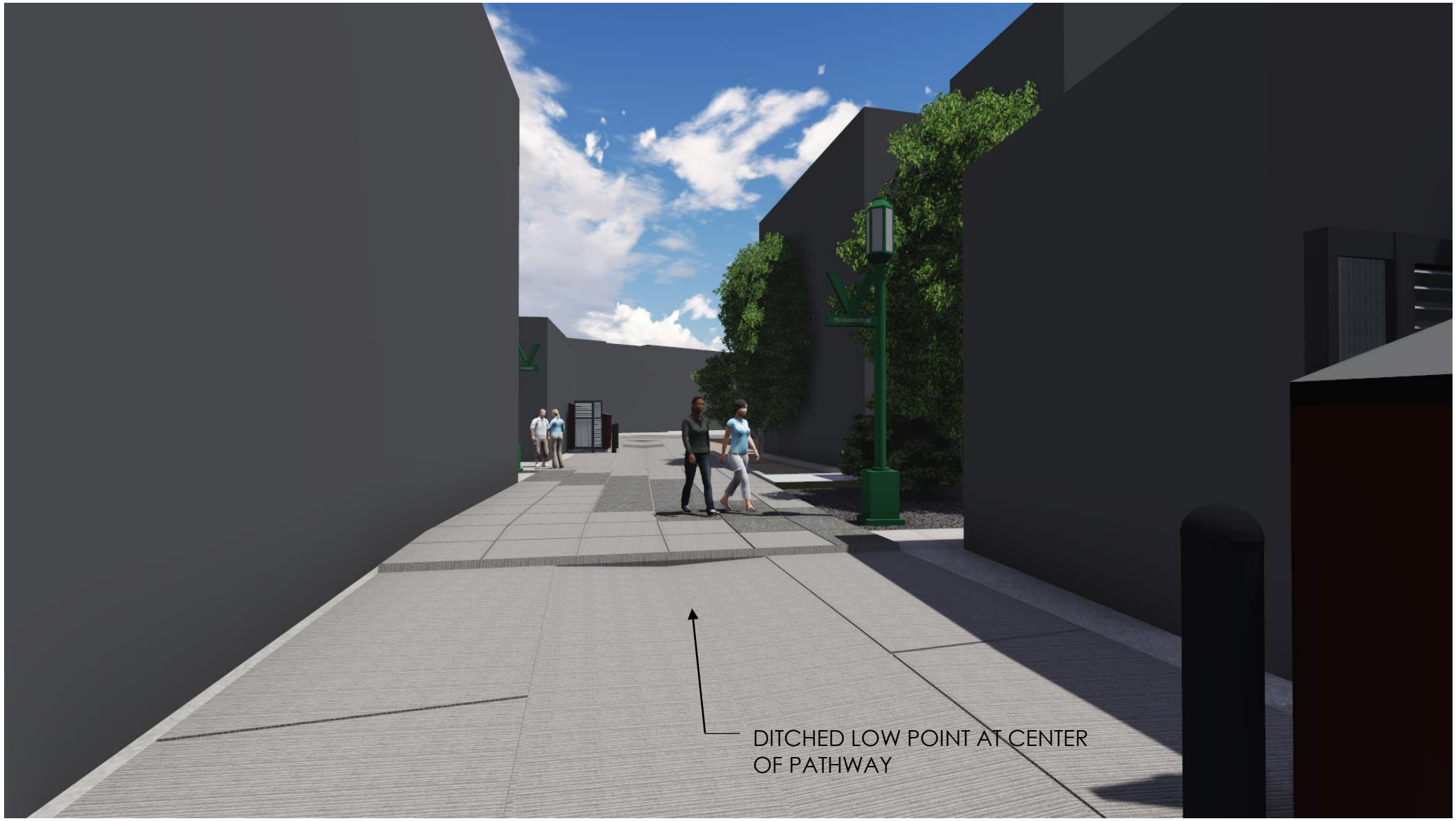

krieger klatt
ARCHITECTS
architecture interiors consulting

HAMILTON ALLEY

ALLEY PATHWAY

krieger klatt
ARCHITECTS
architecture interiors consulting

HAMILTON ALLEY

WAYFINDING SIGNAGE

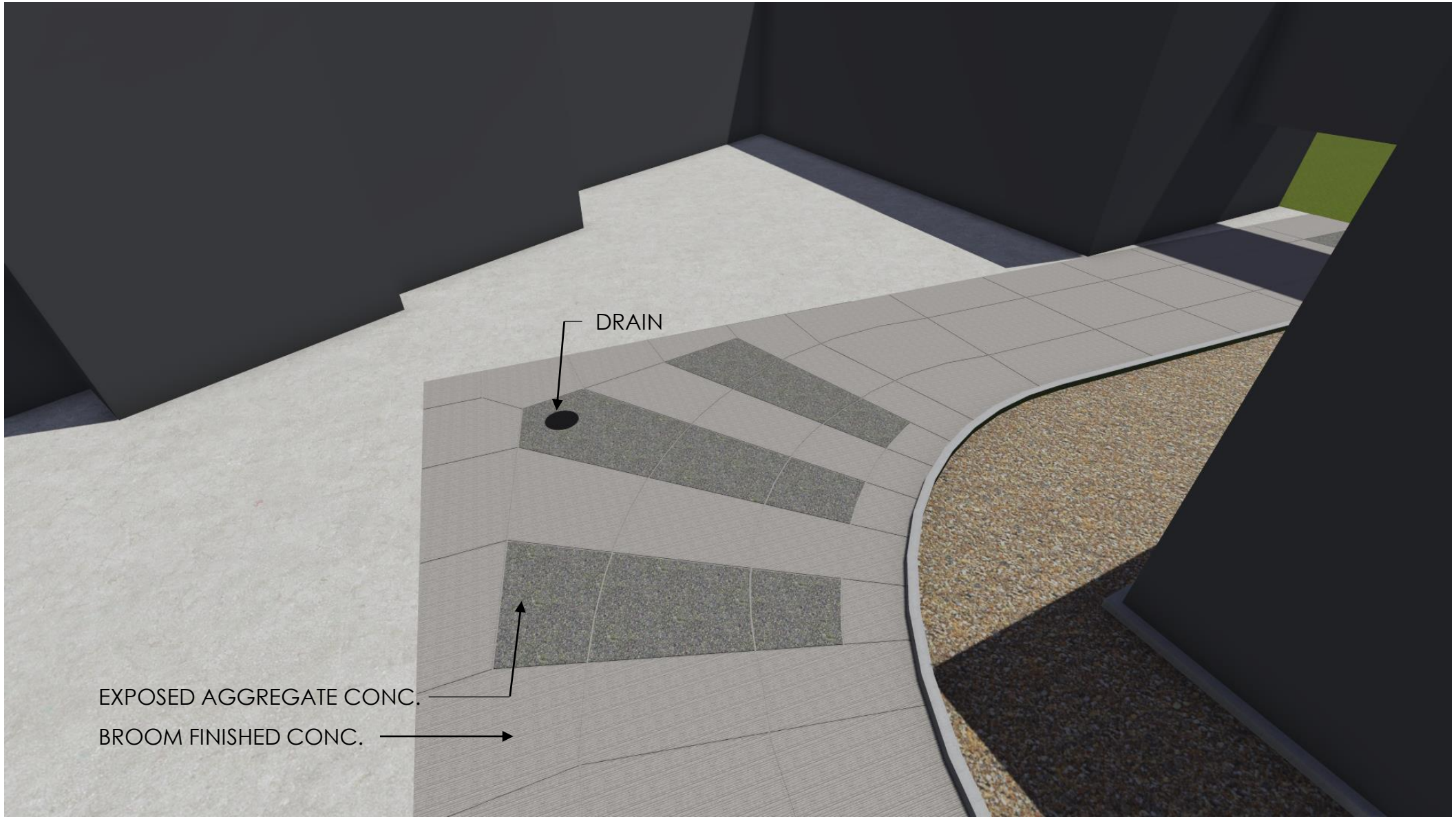

krieger klatt
ARCHITECTS
architecture interiors consulting

HAMILTON ALLEY

CURVE DESIGN

krieger klatt
ARCHITECTS
architecture interiors consulting

HAMILTON ALLEY

DUMPSTER SCREEN OPTION A

krieger klatt
ARCHITECTS
architecture interiors consulting

HAMILTON ALLEY

DUMPSTER SCREEN OPTION B

HAMILTON ALLEY - HAMILTON AVE. TO PARK ST.
Paving Special Assessment District

Cost includes "Via" Signs
Cost does not include Dumpster Screens

(A)	(B)	(C)	(E)
SIDWELL NO.	PARCEL ADDRESS	FRONT	COL. C COST PER FRT FT
HAMILTON ALLEY		LFT	$ 200.00
SOUTH SIDE			
19-25-456-001	188 N. Old Woodward Ave.	38.08	$ 7,616.00
19-25-456-002	152-162 N. Old Woodward Ave.	29.96	$ 5,992.00
19-25-456-039	100-136 N. Old Woodward Ave.	45.83	$ 9,166.00
19-25-456-017	135 E. Maple Rd.	30.71	$ 6,142.00
19-25-456-018	205-213 E. Maple Rd.	41.5	$ 8,300.00
19-25-456-019	225 E. Maple Rd.	29.78	$ 5,956.00
19-25-456-020	City Walkway	20	$ 4,000.00
19-25-456-035	261 E. Maple Rd.	62.5	$ 12,500.00
19-25-456-023	323 E. Maple Rd.	62.5	$ 12,500.00
19-25-456-024	335 E. Maple Rd.	30.31	$ 6,062.00
19-25-456-034	355 E. Maple Rd.	40	$ 8,000.00
19-25-456-027	361 E. Maple Rd.	20.62	$ 4,124.00
19-25-456-028	369 E. Maple Rd.	22.38	$ 4,476.00
19-25-456-029	395 E. Maple Rd.	49.41	$ 9,882.00
NORTH SIDE			
19-25-456-007	220 Hamilton Ave.	197.74	$ 39,548.00
19-25-456-040	City Walkway	4	$ 800.00
19-25-456-041	300 Hamilton Ave.	46	$ 9,200.00
19-25-456-009	330 Hamilton Ave.	52.15	$ 10,430.00
19-25-456-010	344 Hamilton Ave.	25.03	$ 5,006.00
19-25-456-011	360 Hamilton Ave.	25.03	$ 5,006.00
19-25-456-044	400 Hamilton Ave.- Unit 1	12.52	$ 2,504.00
19-25-456-044	400 Hamilton Ave.- Unit 2	12.52	$ 2,504.00
19-25-456-044	400 Hamilton Ave.- Unit 3	12.52	$ 2,504.00
19-25-456-044	400 Hamilton Ave.- Unit 4	12.52	$ 2,504.00
19-25-456-042	City Parking Lot #9	57.38	$ 11,476.00
TOTAL			$ 196,198.00

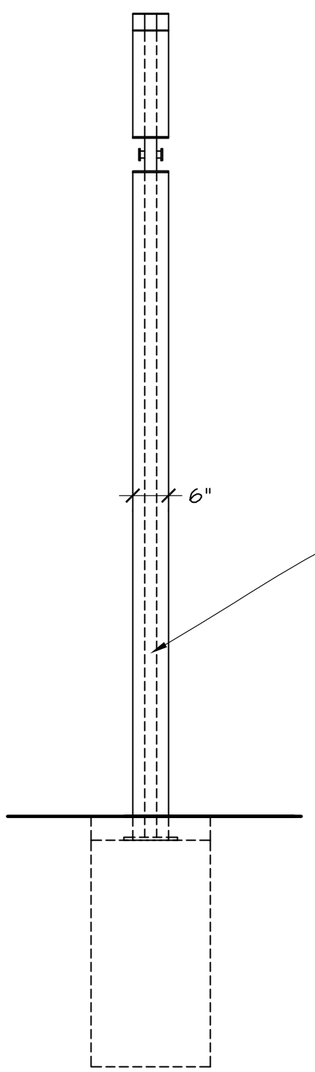

SIDE ELEVATION

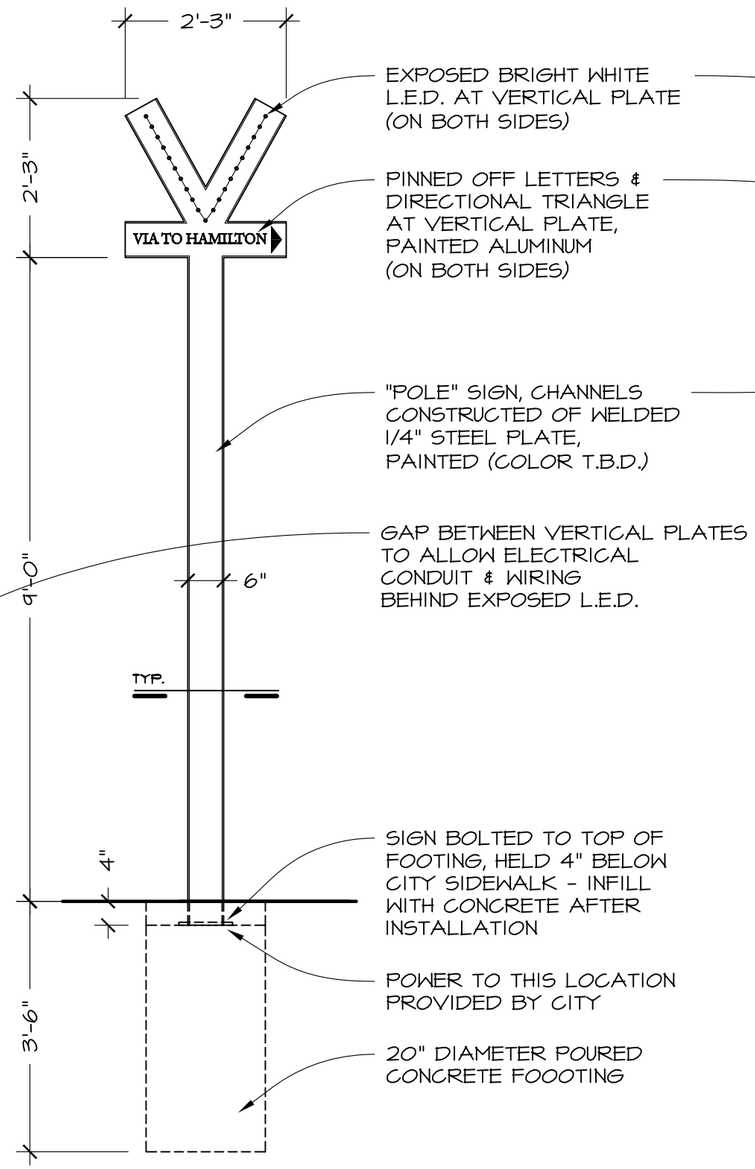

FRONT ELEVATION

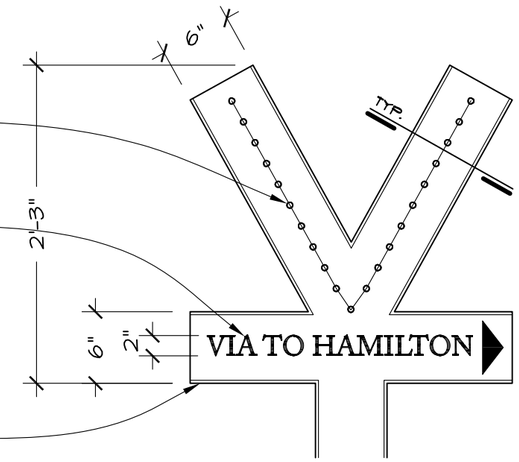

FRONT ELEVATION DETAIL

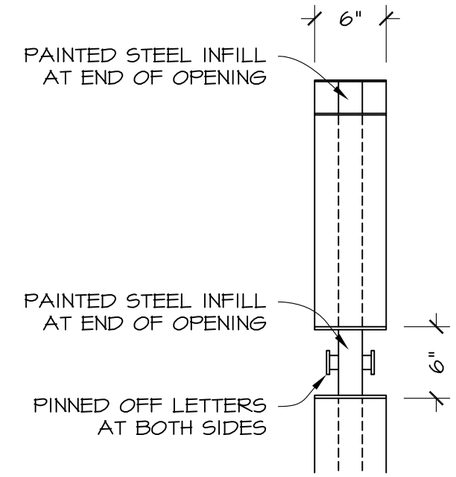

SIDE ELEVATION DETAIL

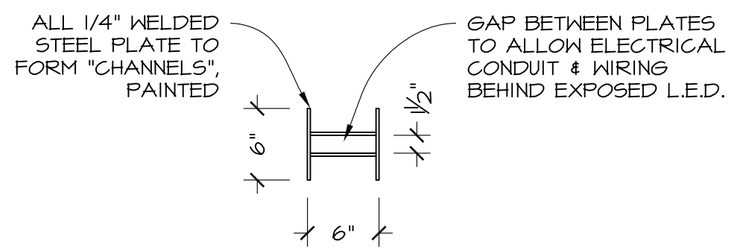

TYPICAL SECTION

TYPICAL POLE MOUNT SIGN

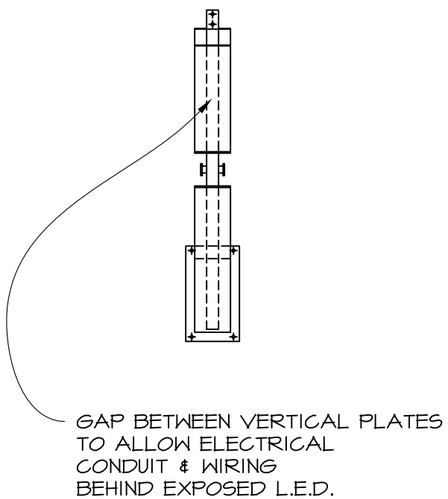

FRONT ELEVATION

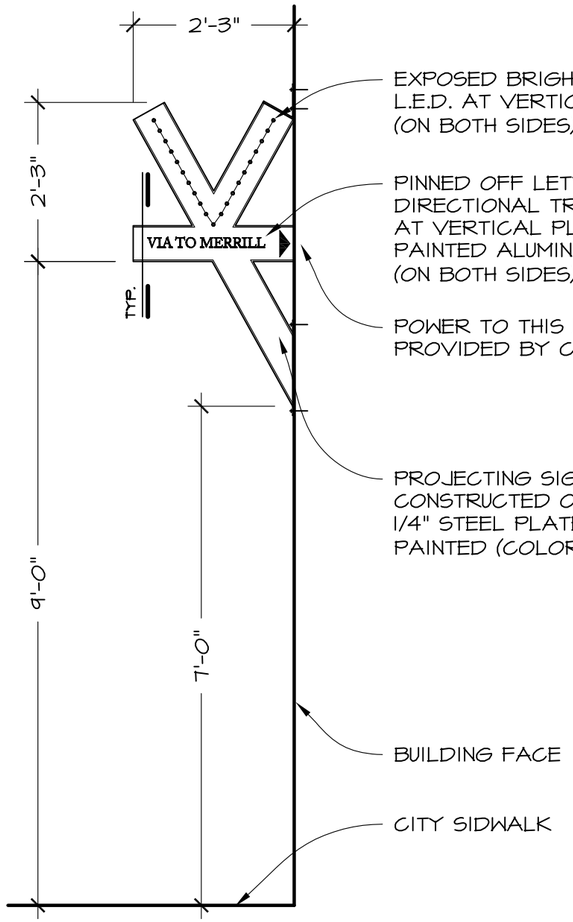

SIDE ELEVATION

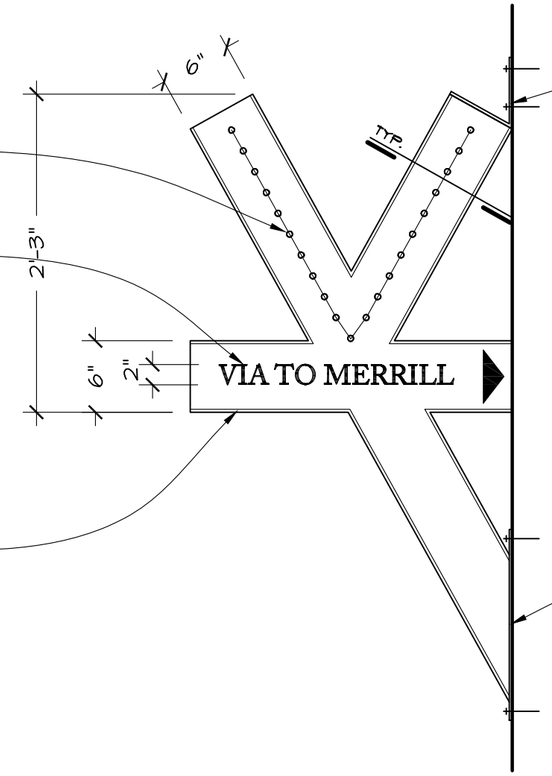

SIDE ELEVATION DETAIL

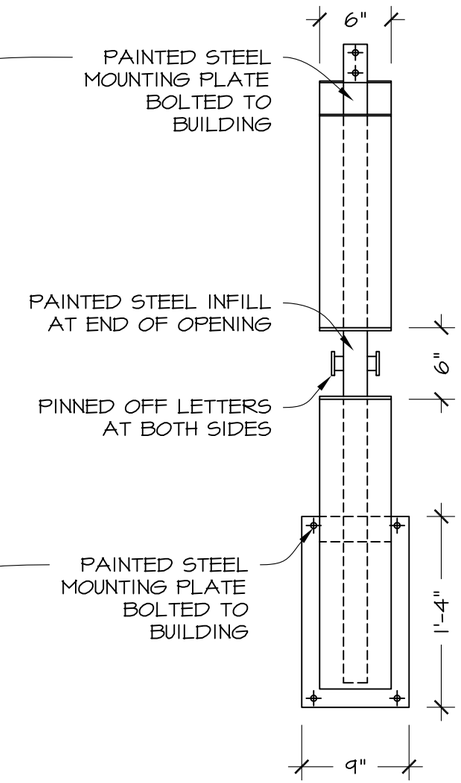

FRONT ELEVATION DETAIL

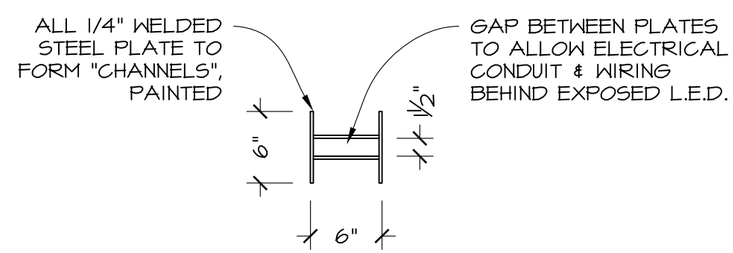

TYPICAL SECTION

TYPICAL PROJECTING WALL SIGN

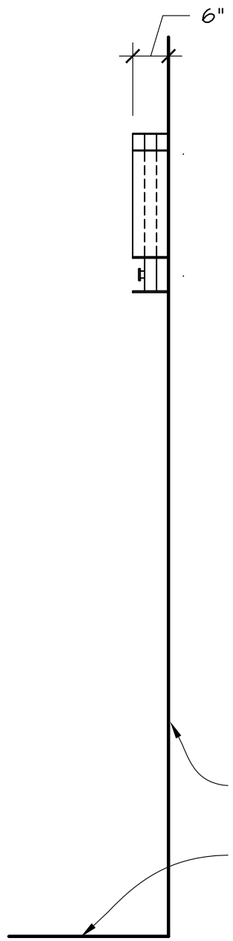

FRONT ELEVATION

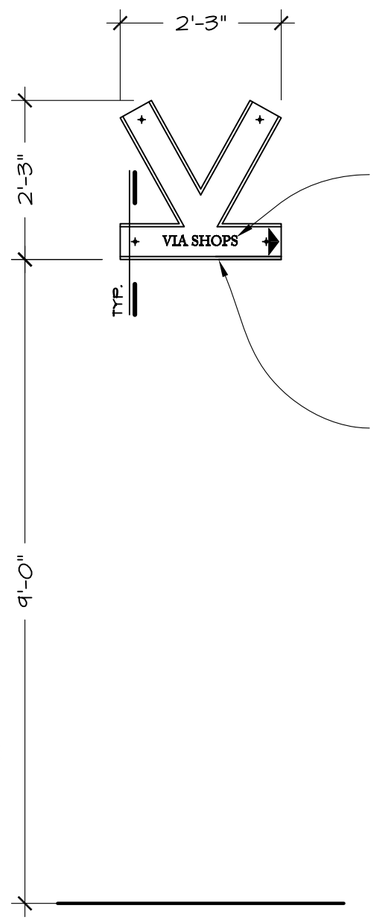

SIDE ELEVATION

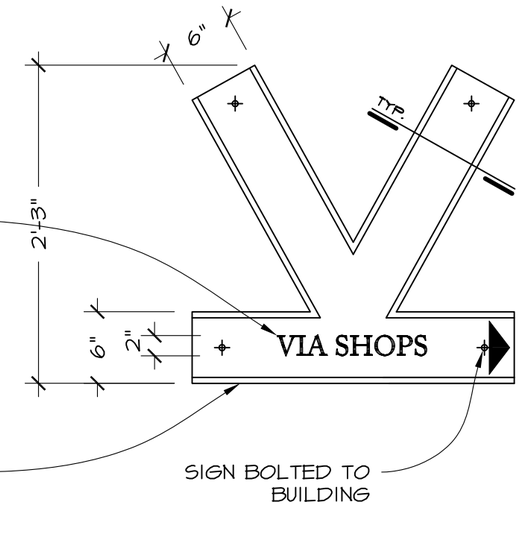

SIDE ELEVATION DETAIL

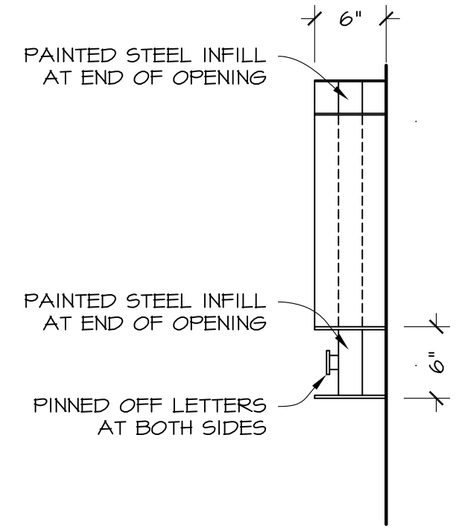

FRONT ELEVATION DETAIL

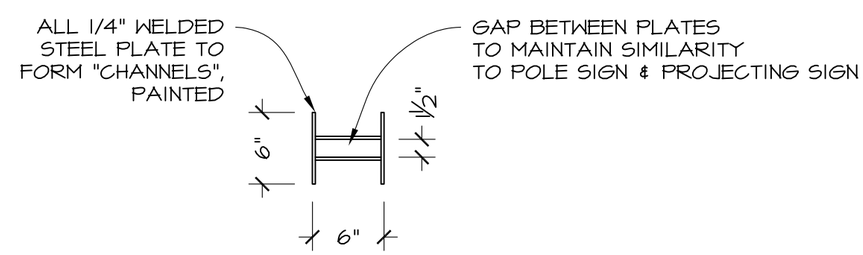

TYPICAL SECTION

TYPICAL WALL SIGN