NOTICE OF PUBLIC HEARING

BIRMINGHAM CITY COMMISSION
SPECIAL LAND USE PERMIT

Meeting Date, Time, Location:	Monday, May 18, 2015, 7:30 PM Municipal Building, 151 Martin Birmingham, MI
Location of Request:	Emagine Palladium & Ironwood Grill 250 North Old Woodward
Nature of Hearing:	To consider a Special Land Use Permit and Final Site Plan to allow the operation of the Emagine Palladium Theatre and Ironwood Grill restaurant, operating under one Class C Liquor License to be held by CH Birmingham, LLC.
City Staff Contact:	Jana Ecker 248.530.1841 jecker@bhamgov.org
Notice Requirements:	Mailed to all property owners and occupants within 300 feet of subject address. Publish April 19, 2015
Approved minutes may be reviewed at:	City Clerk's Office

Persons wishing to express their views may do so in person at the hearing or in writing addressed to City Clerk, City of Birmingham, 151 Martin, Birmingham, MI 48009.
Persons with disabilities needing accommodations for effective participation in this meeting should contact the City Clerk's Office at 248.530.1880 (voice) or 248.644.5115 (TDD) at least one day in advance to request mobility, visual, hearing or other assistance.

MEMORANDUM

Community Development Department

DATE: **May 12, 2015**

TO: **Joseph A. Valentine, City Manager**

FROM: **Jana L. Ecker, Planning Director**

SUBJECT: **Public Hearing for Final Site Plan & Special Land Use Permit at 250 N. Old Woodward – Emagine Palladium and Ironwood Grill**

On March 25, 2015, the Planning Board conducted a public hearing to discuss a request by the applicant to open the Emagine Palladium Theatre, along with the Ironwood Grill., in the former Palladium Theatre space at 250 N. Old Woodward. Both the theatre and the restaurant are proposing to serve alcoholic liquors, and thus in accordance with the Zoning Ordinance, they are required to operate under a valid Special Land Use Permit. The existing Class C liquor license owner is The Palladium of Birmingham, LLC (owner of the Palladium Building), which is assigning the license to CH Birmingham, LLC a/k/a Emagine Palladium and Ironwood Grill Inside Emagine Palladium which will own and operate the theatre and restaurant proposed by the applicant at this time. The Planning Board voted to recommend approval of the Final Site Plan and Special Land Use Permit Amendment to the City Commission with the following conditions:

1. Execute a contract with the City outlining the details of the proposed theatre and restaurant operations upon approval of the SLUP in accordance with the presentation made this evening;
2. Meet all City Department requests, subject to administrative approval;
3. Provide material specifications for the background sign panel on the marquis, and clarify all sign colors;
4. Obtain a variance from the Board of Zoning Appeals for all exterior entry signage;
5. Planning Board finds that the marquis is an architectural feature of the building, and is approved as an alternate design in lieu of a sign band; and
6. LED lighting on the Ironwood Grill signs must be mounted so that it is not visible through the open cut area.

The applicant is scheduled to appear before the Board of Zoning Appeals on May 12, 2015 for a variance to allow signage for both the Emagine Theatre and Ironwood Grill on the first floor sign band although their primary square footage is not located on the first floor of the building. Draft minutes of the meeting of the Board of Zoning Appeals should be ready by the public hearing on May 18, 2015.

Please find attached the staff report presented to the Planning Board, design plans for both the interior and exterior of the building on Hamilton Row, along with the relevant meeting minutes for your review.

SUGGESTED ACTION:

To approve the Final Site Plan and Special Land Use Permit Amendment at 250 N. Old Woodward to allow the operation of the Emagine Palladium Theatre and Ironwood Grill restaurant, operating under one Class C Liquor License to be held by CH Birmingham, LLC.

EMAGINE PALLADIUM AND IRONWOOD GRILL
250 N. OLD WOODWARD
SPECIAL LAND USE PERMIT
2015

WHEREAS, Emagine Palladium and Ironwood Grill have together filed an application pursuant to Article 7, section 7.34 of Chapter 126, Zoning, of the City Code to operate two food and drink establishments under common ownership, both serving alcoholic liquors, as required in Article 6, section 6.02(5) of Chapter 126, Zoning, of the City Code;

WHEREAS, The land for which the Special Land Use Permit is sought is located on the east side of N. Old Woodward along Hamilton Row;

WHEREAS, The land is zoned B-4, and is located within the Downtown Birmingham Overlay District, which permits food and drink establishments serving alcoholic liquors with a Special Land Use Permit;

WHEREAS, Article 7, section 7.34 of Chapter 126, Zoning requires a Special Land Use Permit to be considered and acted upon by the Birmingham City Commission, after receiving recommendations on the site plan and design from the Planning Board for the proposed Special Land Use;

WHEREAS, The Planning Board on March 25, 2015 reviewed the application for Final Site Plan and Special Land Use Permit and recommended approval with the following conditions:

1. Execute a contract with the City outlining the details of the proposed theatre and restaurant operations upon approval of the SLUP in accordance with the presentation made this evening;
2. Meet all City Department requests, subject to administrative approval;
3. Provide material specifications for the background sign panel on the marquis, and clarify all sign colors;
4. Obtain a variance from the Board of Zoning Appeals for all exterior entry signage;
5. Planning Board finds that the marquis is an architectural feature of the building, and is approved as an alternate design in lieu of a sign band; and
6. LED lighting on the Ironwood Grill signs must be mounted so that it is not visible through the open cut area.

WHEREAS, The applicant has agreed to comply with all conditions for approval as recommended by the Planning Board on March 25, 2015;

WHEREAS, The Birmingham City Commission has reviewed Emagine Palladium and Ironwood Grill's Special Land Use Permit application and the standards for such review as set forth in Article 7, section 7.36 of Chapter 126, Zoning, of the City Code;

NOW, THEREFORE, BE IT RESOLVED,The Birmingham City Commission finds the standards imposed under the City Code have been met, subject to the conditions below, and

that the Emagine Palladium and Ironwood Grill application for a Special Land Use Permit authorizing the operation of two food and drink establishments, under common ownership, serving alcoholic liquors with a Class C liquor license with a Direct Connect Endorsement at 250 N. Old Woodward in accordance with Chapter 10, Alcoholic Liquors, is hereby approved;

BE IT FURTHER RESOLVED, That the City Commission determines that to assure continued compliance with Code standards and to protect public health, safety, and welfare, this Special Land Use Permit is granted subject to the following conditions:

1. Execute a contract with the City outlining the details of the proposed theatre and restaurant operations upon approval of the SLUP in accordance with the presentation made this evening;
2. Meet all City Department requests, subject to administrative approval;
3. Provide material specifications for the background sign panel on the marquis, and clarify all sign colors;
4. Obtain a variance from the Board of Zoning Appeals for all exterior entry signage;
5. Planning Board finds that the marquis is an architectural feature of the building, and is approved as an alternate design in lieu of a sign band;
6. LED lighting on the Ironwood Grill signs must be mounted so that it is not visible through the open cut area;
7. Emagine Palladium and Ironwood Grill shall abide by all provisions of the Birmingham City Code;
8. The Special Land Use Permit may be canceled by the City Commission upon finding that the continued use is not in the public interest;
10. Emagine Palladium and Ironwood Grill shall provide for the removal of disposable materials resulting from the operations and maintain the area in a clean and orderly condition by providing the necessary employees to guarantee this condition, and by the placement of a trash receptacle in the outdoor seating area; and
11. Emagine Palladium and Ironwood Grill shall enter into a contract with the City outlining the details of the operation of the proposed restaurants.

BE IT FURTHER RESOLVED, That failure to comply with any of the above conditions shall result in termination of the Special Land Use Permit.

BE IT FURTHER RESOLVED, Except as herein specifically provided, Emagine Palladium and Ironwood Grill and its heirs, successors, and assigns shall be bound by all ordinances of the City of Birmingham in effect at the time of the issuance of this permit, and as they may be subsequently amended. Failure of Emagine Palladium and Ironwood Grill to comply with all the ordinances of the city may result in the Commission revoking this Special Land Use Permit.

MAY IT BE FURTHER RESOLVED that Emagine Palladium and Ironwood Grill are recommended for operation of a theatre and restaurant, under common ownership, serving alcoholic liquors, with a Class C Liquor License with a Direct Connect Endorsement, at 250 N. Old Woodward, Birmingham, Michigan, 48009, above all

others, pursuant to Chapter 10, Alcoholic Liquors, of the Birmingham City Code, subject to final inspection.

I, Laura M. Pierce, City Clerk of the City of Birmingham, Michigan, do hereby certify that the foregoing is a true and correct copy of the resolution adopted by the Birmingham City Commission at its regular meeting held on May 18, 2015.

_____

Laura M. Pierce, City Clerk

painted PMS 261

Painted Modern Master Platinum

“HALO” color = WHITE

Face & Return Painted Modern Master #206 Champagne

HALO WHITE led’s

Applied face graphics for daytime clarity but do NOT illuminate at night

EMAGINE COLOR GUIDE

LOGO

EMAGINE

PANTONE 261 CVC | PANTONE 172 CVC | PANTONE 123 CVC

COLOR DETAIL

Brushed Alumimun

Digital Graphic Application

COLOR DETAIL

DisplayMix Advertising, Inc.

Identity Solutions

877-799-4448

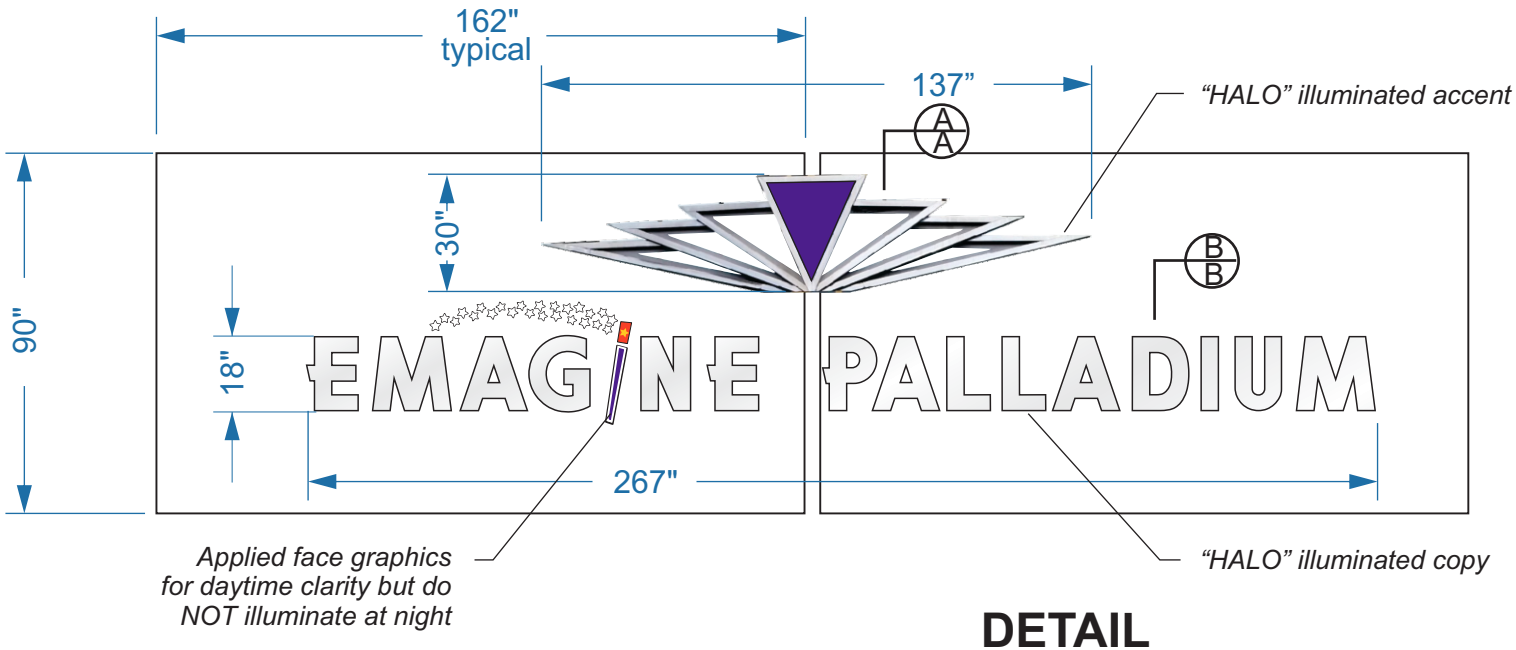

DETAIL
Corporate Exterior Identity Package

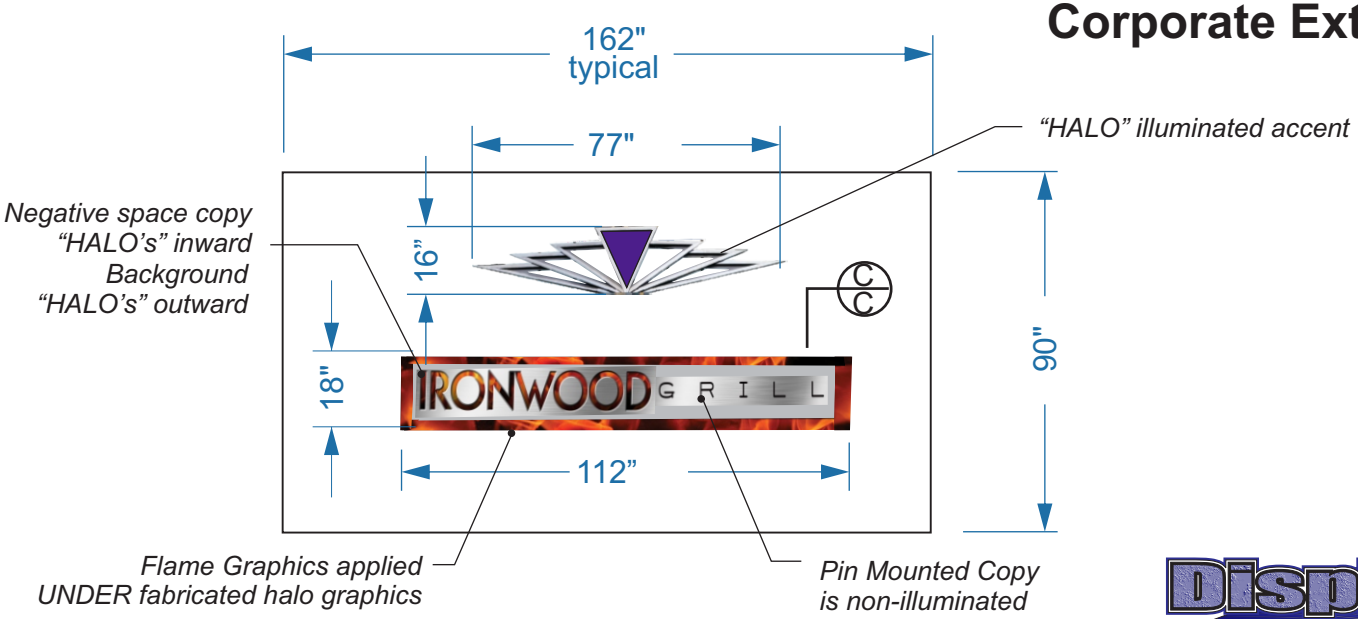

Date: 3-15-15

DisplayMix
Advertising, Inc.
Identity Solutions
877-799-4448

Existing Elevation

Corporate Exterior Identity Package

- Max 18” copy on single horizontal line
- No limit on repetitive message
- No area limit
- Riser & Descenders exempt

DisplayMix Advertising, Inc.
Identity Solutions
877-799-4448

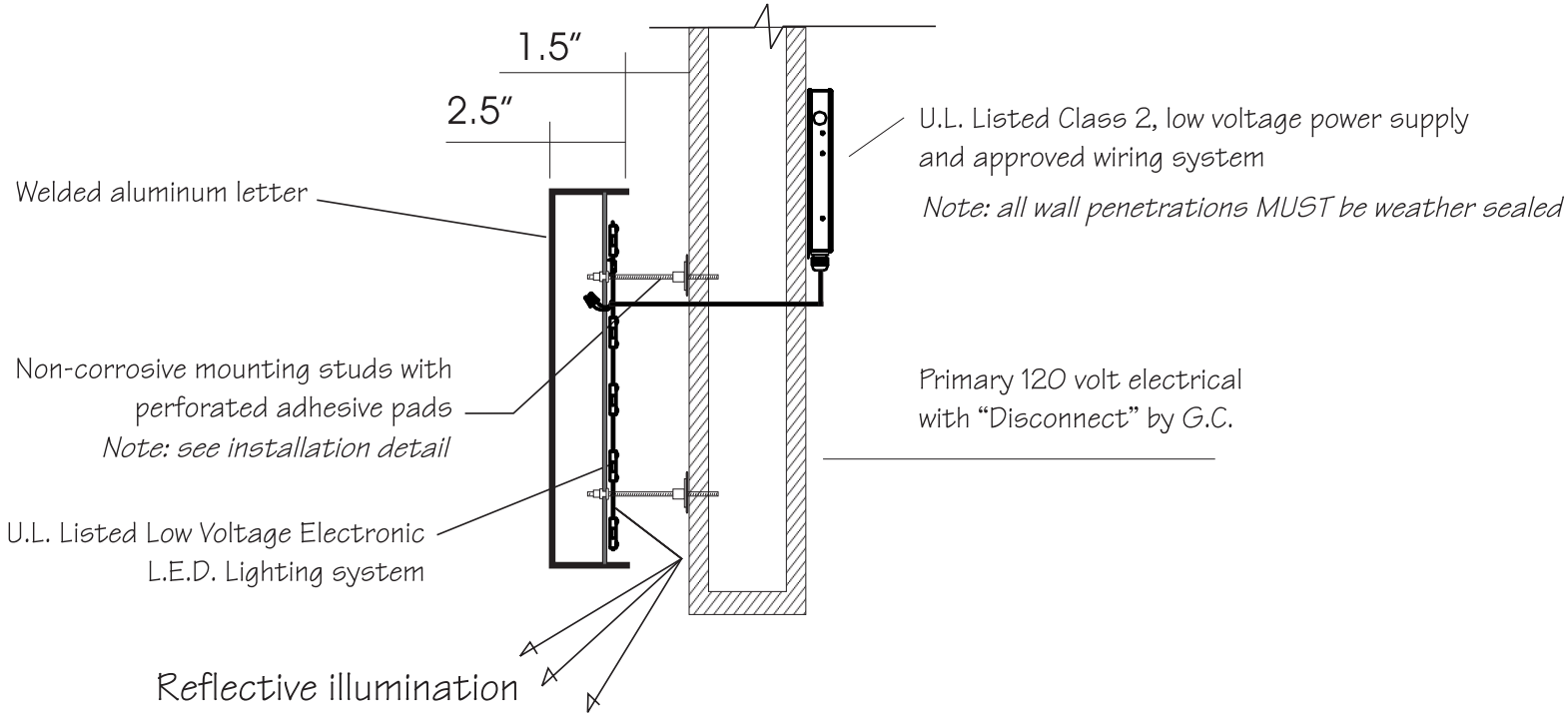

A A B B

"HALO" Illuminated Section detail / Typical LED

Underwriters Laboratories Inc.®

DisplayMix Advertising, Inc.
Identity Solutions
877-799-4448

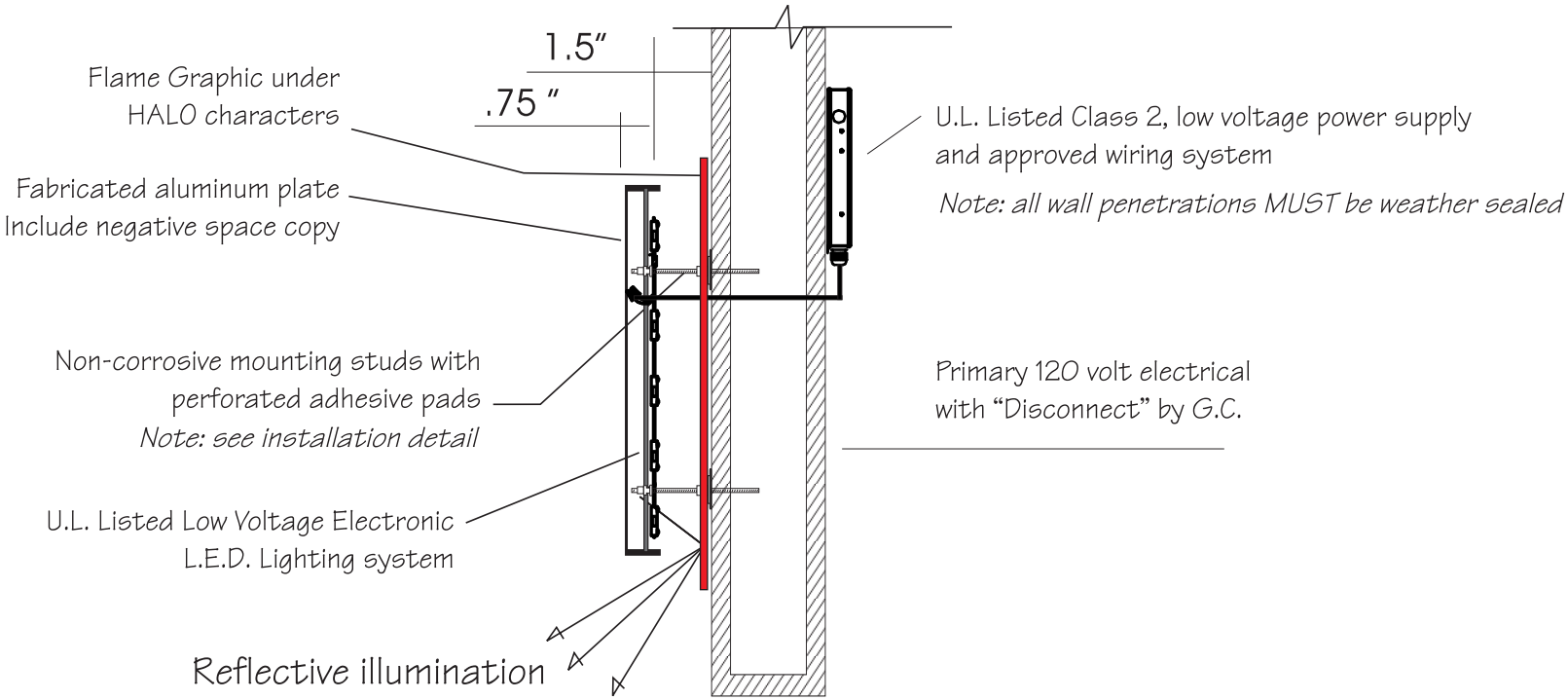

C
C

"HALO" Illuminated Section detail / Typical LED

Underwriters Laboratories Inc.®

DisplayMix
Advertising, Inc.
Identity Solutions
877-799-4448

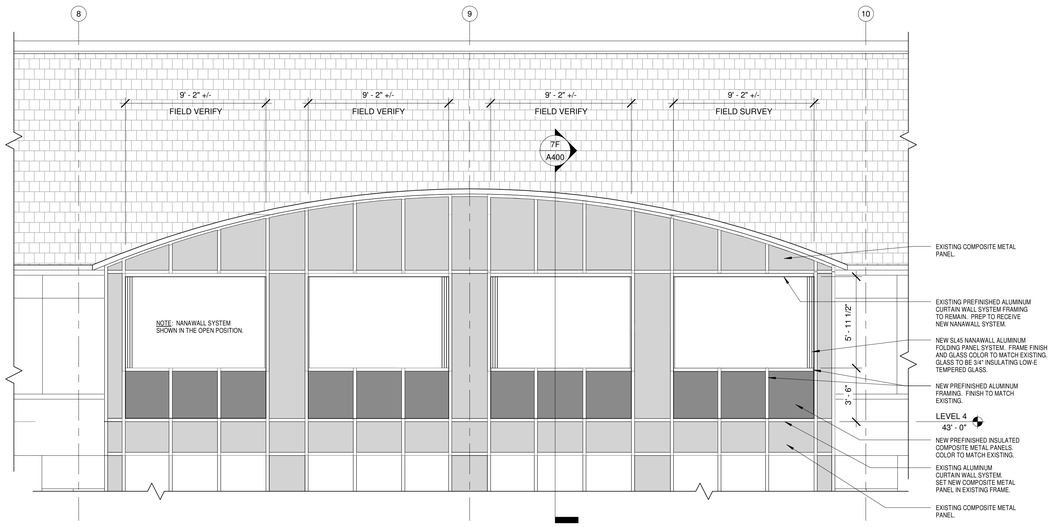

3F / A400 EXTERIOR ELEVATION
1/4" = 1'-0"

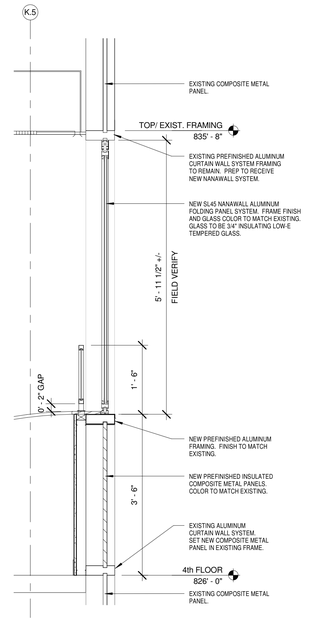

7F / A400 WALL SECTION
3/4" = 1'-0"

STUDIO THREE DESIGN
Architecture • Interior Design
www. studio3design.net
Phone: (317) 595.1000
Fax: (317) 572.1236
8604 Allisonville Road, Suite 330
Indianapolis, IN 46250

CH Birmingham LLC

EMAGINE PALLADIUM THEATER

250 N. Old Woodward Avenue
Birmingham, MI 48009

PROJECT NUMBER:
15012

DATE:
03-16-2015

Revision Schedule

Revision Number	Revision Date	Revision Description

CERTIFICATION:

STATE OF MICHIGAN
KEVIN COPPEDGE
ARCHITECT
No. 47978
LICENSED ARCHITECT

SHEET DESCRIPTION:
NANAWALL DETAILS

SHEET NUMBER:
A400

THIS DRAWINGS IS THE PROPERTY OF STUDIO 3 DESIGN, INC. ALL RIGHTS RESERVED

City of Birmingham
A Walkable Community

MEMORANDUM

Community Development

DATE: **March 20, 2015**

TO: **Planning Board**

FROM: **Jana Ecker, Planning Director**

SUBJECT: **Final Site Plan & Special Land Use Permit Review**
250 N. Old Woodward – Emagine Palladium Theatre and Ironwood Grill

---

Executive Summary

The subject site is located at 250 N. Old Woodward, on the south side of the existing Palladium building, in a portion of the former Palladium Theatre space. The parcel is zoned B-4, Business-Residential and D-4 in the Downtown Overlay District.

The applicant, Emagine Palladium Theatre and Ironwood Grill, is seeking approval of the transfer of ownership of one of the Class C liquor licenses that has long been associated with the Palladium Building to allow the owner to operate the Emagine Palladium Theatre and Ironwood Grill under Chapter 10, Alcoholic Liquors, of the City Code. The assignor of this Class C license is The Palladium of Birmingham, LLC (owner of the Palladium Building), which is assigning the license to CH Birmingham, LLC a/k/a Emagine Palladium and Ironwood Grill Inside Emagine Palladium, which will own and operate the theatre and restaurant proposed at this time. There are 2 members of CH Birmingham, LLC: CH Royal Oak, LLC as to 65% (entity that operates the Emagine Royal Oak), and Cloud Nine Theater Partners, LLC as to 35% (entity that operates the Maple Theater in Birmingham). Emagine owns and operates seven other movie theatres, with a total of 84 screens. Ironwood Grill was founded 5 years ago and currently operates a restaurant in Plymouth, MI, and works in partnership with Emagine Royal Oak to provide selected offerings at that location, and with full food service at Emagine Macomb.

This license was formerly used at Buca di Beppo and is being transferred from 270 N. Old Woodward to 250 N. Old Woodward. This Class C liquor license is proposed to be held by CH Birmingham, LLC with the following permits and endorsements:

- Direct Connection Permit;
- Dance Permit;
- Entertainment Permit;
- Additional Bar Permit;
- Sunday AM Sales Permit;
- Sunday PM Sales Permit; and
- Specific Purpose Permit (for movies and food).

The applicant has indicated that there is no permanent dance floor proposed inside the Emagine Palladium Theatre or Ironwood Grill, but that dancing and entertainment will be offered at special events only. The applicant has also indicated that the additional bar permit is to allow the use of a "floating bar", which will be set up in certain areas of the establishment as needed for special events. Finally, the applicant has advised that the specific purpose permit is to allow the showing of movies and the service of food outside the normal operating hours for the service of alcohol (such as special midnight release showings that could go past 2:00am, thus theater would be open past 2:00am, but alcohol service would cease at 2:00am). No outdoor dining permit is requested, nor required.

Chapter 10 requires that the applicant obtain a Special Land Use Permit and approval from the City Commission to open a new liquor establishment, and to transfer ownership of existing liquor licenses. Emagine Palladium Theatre and Ironwood Grill will be required to obtain a recommendation from the Planning Board on the Final Site Plan and Special Land Use Permit, and then obtain approval from the City Commission for the Final Site Plan and Special Land Use Permit ("SLUP"), and for the transfer of ownership of the existing liquor license.

On March 11, 2015, the applicant appeared before the Planning Board for review of the proposed Emagine Theatre and Ironwood Grill. After much discussion, the Planning Board postponed the matter and requested additional information on the proposed membership theatre concept, an updated and ordinance compliant sign package with all required details, and design and material details on the proposed exterior changes on the fourth floor of the south elevation where open air dining is proposed.

At this time, the applicant has not provided any additional information on the proposed membership theatre concept, but has provided an updated sign package and a detailed elevation of the fourth floor of the south elevation where open air dining is proposed.

1.0 Land Use and Zoning

1.1 Existing Land Use – A portion of the tenant space was most recently the Palladium Theatre. The tenant space is currently vacant. Land uses surrounding the site are retail, commercial and residential.

1.2 Existing Zoning – The property is currently zoned B-4, Business-Residential, and D-4 in the Downtown Overlay District. The existing use and surrounding uses appear to conform to the permitted uses of each Zoning District.

1.3 Summary of Land Use and Zoning - The following chart summarizes existing land use and zoning adjacent to and/or in the vicinity of the subject site.

	North	South	East	West
Existing Land Use	Commercial / Retail	Commercial / Retail	Commercial / Retail	Commercial / Retail
Existing Zoning District	B-4 Business-Residential	B-4 Business-Residential	B-4 Business-Residential	B-4 Business-Residential
Downtown Overlay Zoning District	D-4	D-4	D-4	D-4

2.0 Proposed Theatre and Restaurant Operations

Both movie theatres and food and drink establishments are permitted in the B4 zoning district, and alcoholic beverages may be served with approval of a valid SLUP. The proposed theatre and restaurant space is approximately 31,000 sq.ft. in size, and is proposing to operate 5 movie screens with a total of 590 seats. The former Palladium Theatre had 12 screens and 2200 seats. Emagine Palladium Theatre and Ironwood Grill propose to operate under a new neighborhood theatre membership model, where patrons must buy a yearly membership. Under this model, only members can purchase movie tickets, and all individual seats will be reserved for a specific date and time. The applicant does intend to provide guest memberships to visitors staying at the Townsend Hotel. All theatre seating will be luxury recliners and luxury rockers in the digital projection auditoriums. The proposed standard hours of operation for the theatre are 10:00am – 1:00am, seven days a week.

Ironwood Grill is proposed to be open to the public (with no membership requirement). The restaurant will provide an upscale casual dining experience and offer 198 seats, including 17 seats at the bar, with an exhibition style brick pizza oven kitchen and an open air dining experience overlooking Hamilton above the theatre marquis. Ironwood Grill will offer award winning BBQ specialties and wood-fired Neapolitan style pizzas, a variety of freshly prepared dishes and an extensive selection of craft beer, wine and cocktails. A private banquet room is also proposed with a private bar that will be available for rental for birthday parties, meetings, bridal showers and similar functions. The proposed hours of operation for the Ironwood Grill are 10:00am – 12:00am, seven days a week. **At this time, the applicant has not provided any additional information on the proposed membership theatre concept, as requested by the Planning Board on March 11, 2014.**

Emagine Palladium Theatre members will be entitled to priority reserved seating at the Ironwood Grill during busy periods and be entitled to call ahead food service. Theatre

members can enjoy concession stand food and beverages that will be offered in the theatre lobby, or they order from the Ironwood Grill and restaurant wait staff will provide the service of food and beverages from the Ironwood Grill to patrons' theatre seat prior to the start of the movie.

The applicant will be required to execute a contract with the City outlining the details of the proposed theatre and restaurant operations that must be fully executed upon approval of the SLUP.

3.0 Screening and Landscaping

3.1 Screening – No changes are proposed. If any additional mechanical units or venting are required, all changes must be submitted to the Planning Division for approval.

3.2 Landscaping –No changes are proposed. All existing street trees are proposed to remain.

4.0 Parking, Loading, Access, and Circulation

4.1 Parking – As the subject site is located within the Parking Assessment District, the applicant is not required to provide on-site parking for theatre or restaurant uses.

4.2 Loading - Loading spaces are not required, nor proposed for this tenant space individually. Loading areas for the entire building are provided off of Ferndale Avenue.

4.3 Vehicular Access & Circulation - Vehicular access to the building will not be altered.

4.4 Pedestrian Access & Circulation – Pedestrian access to both the theatre and the restaurant will be available directly from the City sidewalk. Patrons will walk into the first floor lobby and will be greeted by a concierge who will assist both restaurant and movie membership guests with reservations and ticketing, and direct patrons to the stairs and elevators to the second floor.

4.5 Streetscape – The existing sidewalk conforms to the current Downtown Birmingham Streetscape Standards. No changes are proposed.

5.0 Lighting

No exterior lighting changes are proposed.

6.0 Departmental Reports

6.1 Engineering Division – No concerns were reported from the Department of Public Services.

6.2 Department of Public Services – No concerns were reported from the Department of Public Services.

6.3 Fire Department – The only comments received from the Fire Department was to note the requirement for a Knox box.

6.4 Police Department - No concerns were reported from the Police Dept.

6.5 Building Department – Standard comments were received from the Building Department. The following area of concern was noted:

The existing curtain wall is fire stopped at each floor level. The fire stopping system must be maintained or replaced with a UL approved system.

7.0 Design Review

The applicant is proposing several design changes to the existing building. The changes proposed are to the design of the marquis itself, signage changes and the removal of decorative metal elements and fixed windows at the new fourth floor. The applicant is proposing to remove the art deco metal design element from the top of the marquis, as well as the changeable channel letter boards that were previously used to list all movies being shown in the former Palladium Theatre. In addition, 40' of the fourth floor fixed curtain wall windows are proposed to be replaced with a retractable Nanawall folding window system to provide an open air dining experience in the portion of the Ironwood Grill overlooking Hamilton Street above the existing marquis. **At this time the applicant has not provided specification sheets or a color selection for the Nanawall system.** The applicant has indicated that a "code compliant safety barrier" will be provided across this opening, and be covered by a spandrel glass panel from 42" above the finished floor to the bulkhead above. **No further details, elevation drawings or materials have been provided to illustrate the design of the proposed safety barrier or the panel that may be attached to the safety barrier. The applicant will be required to provide specifics on the proposed "code compliant safety barrier" before design approval can be granted. In any event, the use of spandrel glass is not permitted in the Downtown Birmingham Overlay District, nor are balconies or railings permitted to be made of glass (Article 3, section 3.04(E) of the Zoning Ordinance).** The applicant has now provided an elevation drawing of the fourth floor on the south elevation where open air dining is proposed. The new plans indicate that the existing prefinished aluminum curtain wall framing is to remain. A new Nanawall system is proposed for the upper 5.95' of the existing opening. A new prefinished aluminum frame is proposed to be added 3.5' above the bottom of the existing opening. This frame will hold the base of the Nanawall frame, as well as the top of a new row of prefinished insulated composite metal panels to match the existing panels below. **The plans note that all colors will match existing, but the existing colors are not noted. The plans also show what appears to be a railing element on the top of the proposed metal panel guard rail. This is proposed**

to be mounted up to 2" from the top of the metal panel and extend 1.5' above. No other details are provided, so it is unclear what this is, and of what material it is made. The plans no longer propose the use of spandrel glass, and metal panels are permitted for use on balconies and railings in accordance with Article 3, section 3.04(E) of the Zoning Ordinance.

As the proposed open air dining is not located outside of the building footprint at grade or in the public right-of-way, most of the normal outdoor dining requirements do not apply. No outdoor dining permit or license agreement is required. However, the applicant is proposing that the Nanawall window system will only be open during the regular hours of business for the Ironwood Grill (weather permitting). As the restaurant will not be open past midnight on any evening, no open air dining will be offered past midnight. **At this time, the applicant has not provided any specifications sheets on the proposed dining tables and chairs to be used within the restaurant in the area adjacent to the Nanawall retractable windows. At this time, the applicant has not provided specification sheets on the proposed dining tables and chairs to be used adjacent to the Nanawall window system. Photos of the interior of the restaurant have been provided.**

Signage

As discussed above, the decorative features on the top of the marquis are proposed to be removed to create a clean line, and the existing channel letter boards are proposed to be removed as well. Three new name letter signs and three graphic elements are proposed to be mounted to the existing marquis sign.

At this time, no signage drawings or plans have been provided. The applicant has provided a photo with the proposed signage overlaid on the existing marquis. This photo is not to scale, and thus it is unclear as to what the total amount of signage proposed. The applicant has now submitted sign drawings, with dimensions, for each of the signs proposed to be placed on the existing marquis. **The plans submitted appear to show the removal of the changeable copy boards on the marquis, with the installation of a new black background panel. No details have been provided on the material of the background panel. The following chart lists all proposed dimensions of the signage proposed to be placed on the existing marquis.**

Type of Sign	Location	Content	Height	Width	Total Area	Depth
Name Letter	Center of marquis	Emagine Palladium	1.5'	22.25'	33.3	2.5"
Name Letter	West end of marquis	Ironwood Grill	1.5'	9.3'	13.9	.75"
Name Letter	East end of marquis	Ironwood Grill	1.5'	9.3'	13.9	.75"
				TOTAL:	**61.1 sq.ft.**	

No material samples or colors have been provided, nor have the mounting details, projection details or full dimensions for any of the signs proposed to

be mounted to the existing marquis. The applicant will be required to provide accurate, to scale drawings of the proposed signage, as well as a section view to show the mounting details and projection information, as well as material and lighting specifications. The applicant has now submitted sign drawings, with dimensions, for the proposed signage to be placed on the existing marquis, and has submitted section views to show the mounting and projection details. The applicant has also provided information on the proposed sign materials and sign lighting.

Article 3 of the Zoning Ordinance provides that signage within the Downtown Birmingham Overlay District shall be integrally designed and painted with the storefront, with one sign permitted per entry. The proposed signage does fit on the existing marquis, which can be considered an architectural feature integrally designed with the building. However, Article 3 further provides that only one sign is permitted per entry for each business whose primary square footage is on the first story. **As the primary square footage for both the Emagine theatre and the Ironwood Grill is on the fourth story, the applicant will be required to obtain a variance for all exterior entry signage.**

Article 3 of the Zoning Ordinance also provides that buildings within the Downtown Birmingham Overlay District may have sign bands a maximum of 1.5' in vertical dimension between the first and second floors. Where a sign band is not architecturally feasible based on building design, an alternate design will be considered, provided the following conditions are met:

1. The sign must fit within the total sign area allowed for the business;
2. The sign must be compatible with the building's street design and will enhance the streetscape;
3. The sign adheres to the goals of the 2016 Plan.

The photo does show the height of the name letter signs at 1.5', although they are not mounted directly on the sign band, but on the previously approved marquis which is located in the sign band between the first and second floor. The only information provided on the sign material is that the signs are constructed of back lit acrylic panels with crisp graphics and colors. The Planning Board must determine if a sign band is architecturally feasible above the theatre entry doors between the first and second floors. **As the marquis can be deemed an architectural feature of the building, was previously approved and is located in the area generally reserved for a sign band, the Planning Board may wish to approve it as an alternative design for the placement of signage.** The existing marquis itself is however larger than 1.5' in height. An alternative design could be approved in this case as the signage fits within the total sign area allowed (no maximum square footage in the Overlay), and the signage is compatible with the building's street design, will enhance the streetscape, and is a pedestrian scale, thus adhering to the goals of the 2016 Plan.

The art deco graphic elements proposed are to be constructed of Modern Master Platinum. The triangle element is proposed to be painted purple (PMS 261) to match other detailing on the Palladium building. **No colors have been provided for the other portions of the graphic element.**

The Emagine Palladium name letter sign is proposed to be constructed of Painted Modern Master in Champagne (PMS 206). The Ironwood Grill name letter signs are proposed to have a back panel with digital flame graphics in black (PMS 261 is noted, but also shown as purple on plans), orange (PMS 172) and gold (PMS 123), and a brushed aluminum plate mounted over the graphics with open cut lettering. All signs are dimensional, and will be pin mounted 1.5" off the wall.

Article 3 of the Zoning Ordinance also provides that external signs shall not be internally illuminated, but may be back lit or externally lit. The applicant has now provided lighting details for each of the signage elements. All signage is proposed to use low voltage electronic LED lighting mounted behind signage, to reflect off background and subtly illuminate each element with a halo effect. **However, due to the design of the Ironwood Grill signs including open cut lettering, the LED lighting must be mounted so that it is not visible through the open cut area. It must be mounted to a solid portion of the aluminum panel from which the letters are open cut.**

8.0 Downtown Birmingham 2016 Overlay District

The site is located within the D-4 zone of the DB 2016 Regulating Plan, within the Downtown Birmingham Overlay District. Specifically, the 2016 Plan recommends a mix of retail, office, restaurant, entertainment and residential uses downtown, and thus the Palladium Building itself and the theatre and restaurant proposed are exactly the uses encouraged in the 2016 Plan. The architectural details are provided on the theatre entrance and the signage is proposed at a pedestrian scale, and the open air dining above will add activity and interest to Hamilton Street. **However, the use of glass railings and spandrel glass is not in accordance with the recommendations of the 2016 Plan. Other materials should be selected.** As noted above, the applicant has removed all previously proposed spandrel glass and replaced it with metal panels, which are permitted.

9.0 Approval Criteria for Final Site Plan

In accordance with Article 7, section 7.27 of the Zoning Ordinance, the proposed plans for development must meet the following conditions:

(1) The location, size and height of the building, walls and fences shall be such that there is adequate landscaped open space so as to provide light, air and access to the persons occupying the structure.

(2) The location, size and height of the building, walls and fences shall be such that there will be no interference with adequate light, air and access to adjacent lands and buildings.

(3) The location, size and height of the building, walls and fences shall be such that they will not hinder the reasonable development of adjoining property not diminish the value thereof.

(4) The site plan, and its relation to streets, driveways and sidewalks, shall be such as to not interfere with or be hazardous to vehicular and pedestrian traffic.

(5) The proposed development will be compatible with other uses and buildings in the neighborhood and will not be contrary to the spirit and purpose of this chapter.

(6) The location, shape and size of required landscaped open space is such as to provide adequate open space for the benefit of the inhabitants of the building and the surrounding neighborhood.

10.0 Approval Criteria for Special Land Use Permits

Article 07, section 7.34 of the Zoning Ordinance specifies the procedures and approval criteria for Special Land Use Permits. Use approval, site plan approval, and design review are the responsibilities of the City Commission. This section reads, in part:

> Prior to its consideration of a special land use application (SLUP) for an initial permit or an amendment to a permit, the **City Commission shall refer the site plan and the design to the Planning Board for its review and recommendation. After receiving the recommendation, the City Commission shall review the site plan and design of the buildings and uses proposed** for the site described in the application of amendment.
>
> The City Commission's approval of any special land use application or amendment pursuant to this section shall constitute approval of the site plan and design.

11.0 Planning Department Findings

Based on a review of the site plans submitted, the Planning Department finds that the applicant meets all of the established ordinance requirements to qualify for a Special Land Use Permit to operate a theatre and restaurant serving alcoholic liquors. **However, all design elements have not yet been finalized to allow a full review by the Planning Board.** The following sample motions with attached conditions have been provided in the event that the Planning Board deems it appropriate to send a recommendation of approval forward to the City Commission. The applicant has now provided a signage design package and an elevation drawing of the south elevation. However, the applicant has not submitted any further information on the proposed theatre membership concept as requested by the Planning Board on March 11, 2015.

12.0 Sample Motion Language

Based on a review of the site plans submitted, the Planning Board recommends APPROVAL of the applicant's request for a Final Site Plan and a SLUP approval to permit Emagine Palladium Theatre and Ironwood Grill to operate at 250 N. Old Woodward with the following conditions:

1. Provide details on the membership theatre concept prior to appearing before the City Commission;
2. Execute a contract with the City outlining the details of the proposed theatre and restaurant operations upon approval of the SLUP;
3. Provide all colors for the proposed metal panels, Nanawall system and aluminum framing, and provide details on what appears to be a railing on top of the metal panel guard rail on the fourth floor of the south elevation;
4. The fire stopping system must be maintained or replaced with a UL approved system where the Nanawall is proposed;
5. Provide material specifications for the background sign panel on the marquis, and clarify all sign colors;
6. Obtain a variance from the Board of Zoning Appeals for all exterior entry signage;
7. Planning Board finds that the marquis is an architectural feature of the building, and is approved as an alternate design in lieu of a sign band; and
8. LED lighting on the Ironwood Grill sings must be mounted so that it is not visible through the open cut area.

OR

Motion to recommend POSTPONEMENT of the Final Site Plan and SLUP to the City Commission for 250 N. Old Woodward, Emagine Palladium Theatre and Ironwood Grill, pending receipt of the following:

_____
_____
_____
_____

OR

Motion to recommend DENIAL of the Final Site Plan and SLUP to the City Commission for 250 N. Old Woodward, Emagine Palladium Theatre and Ironwood Grill, for the following reasons:

1. _____
2. _____
3. _____

Planning Board Minutes
March 11, 2015

SPECIAL LAND USE PERMIT ("SLUP")
FINAL SITE PLAN REVIEW
250 N. Old Woodward Ave.
Emagine Palladium Theatre, and Ironwood Grill
Application to allow a movie theatre, restaurant and bar serving alcoholic liquors in a portion of the former Palladium Theatre space

Ms. Ecker explained that the subject site is located at 250 N. Old Woodward Ave., on the south side of the existing Palladium building, in a portion of the former Palladium Theatre space. The parcel is zoned B-4, Business-Residential and D-4 in the Downtown Overlay District.

The applicant, Emagine Palladium Theatre and Ironwood Grill, is seeking approval of the transfer of ownership of one of the Class C liquor licenses that has long been associated with the Palladium Building to allow the owner to operate the Emagine Palladium Theatre and Ironwood Grill under Chapter 10, Alcoholic Liquors, of the City Code. This license was formerly used at Buca di Beppo and is being transferred from 270 N. Old Woodward to 250 N. Old Woodward. This Class C liquor license is proposed to be held by CH Birmingham, LLC,

The applicant has indicated that dancing and entertainment will be offered at special events only. The applicant has also indicated that the additional bar permit is to allow the use of a "floating bar," which will be set up in certain areas of the establishment as needed for special events. Finally, the applicant has advised that the specific purpose permit is to allow the showing of movies and the service of food outside the normal operating hours for the service of alcohol (such as special midnight release showings that could go past 2 a.m., thus the theater would be open past 2 a.m., but alcohol service would cease at 2 a.m.). No outdoor dining permit is requested, nor required.

Emagine Palladium Theatre and Ironwood Grill will be required to obtain a recommendation from the Planning Board on the Final Site Plan and SLUP and then obtain approval from the City Commission for the Final Site Plan and SLUP, and for the transfer of ownership of the existing liquor license.

Ms. Ecker advised that the proposed theatre and restaurant space is approximately 31,000 sq. ft. in size, and is proposing to operate five movie screens are proposed with a total of 590 seats. The former Palladium Theatre had 12 screens and 2200 seats. Emagine Palladium Theatre and Ironwood Grill propose to operate under a new neighborhood theatre membership model, where patrons must purchase a yearly membership. Under this model, only members can buy movie tickets, and all individual seats will be reserved for a specific date and time. The applicant does intend to provide guest memberships to visitors staying at the Townsend Hotel. All theatre seating will be luxury recliners and luxury rockers in the digital projection auditoriums.

Ironwood Grill is proposed to be open to the public (with no membership requirement). The restaurant will provide an upscale casual dining experience and offer 198 seats,

including 17 seats at the bar, with an exhibition style brick pizza oven kitchen and an open air dining experience overlooking Hamilton St. Ironwood Grill will offer award winning BBQ specialties and wood-fired Neapolitan style pizzas, a variety of freshly prepared dishes and an extensive selection of craft beer, wine and cocktails. A private banquet room is also proposed with a private bar that will be available for rental.

Design Review

The applicant is proposing several design changes to the existing building. The changes proposed are to the design of the marquis itself, signage changes and the removal of decorative metal elements and fixed windows at the new fourth floor. The applicant is proposing to remove the art deco metal design element from the top of the marquis as well as the changeable channel letter boards that were previously used to list movies being shown in the former Palladium Theatre. In addition, 40 ft. of the fourth floor fixed curtain wall windows are proposed to be replaced with a retractable Nanawall folding window system to provide an open air dining experience in the portion of the Ironwood Grill overlooking Hamilton St. above the existing marquis.

Three new name letter signs and three graphic elements are proposed to be mounted to the existing marquis sign. The sign drawings as submitted do not meet all required sign standards. The applicant has agreed to comply with the sign requirements. Details are needed from the petitioner with regard to the balcony railing, the spandrel glass and signage. This evening the board will consider only the packet that has been submitted and reviewed.

Discussion followed as to whether the membership requirement causes the operation to be a private social club rather than a movie theatre and how that may affect the Liquor License.

Mr. Paul Glance, CEO of Imagine Entertainment, Inc., talked about the project. They have substantially reduced the seat count which is consistent with their goal of serving the local community as a neighborhood theatre. They believe that by creating an economic barrier to entry they will to some degree ensure they are serving the demographic that they endeavor to serve. They are considering a $400 membership fee which would include a $250 gift card that could be used at the theatre. Thereafter the membership would be $150/year. He wants the theatre to be a place where there will be civility and good behavior.

Mr. Glance advised that on occasions when there is a special midnight showing, the theatre may stay open until 2 a.m.

Ms. Whipple-Boyce asked if it is possible to see what is going on in other floors in order to understand how this application fits into the site as a whole. Ms. Lazar said the new concept of requiring membership comes across to her as being very exclusionary and she is uncomfortable with it. Mr. Glance replied the venue is so small that they can't serve a region. The best they can do is to serve a community. He noted they are not selling movies anymore; they are selling an out-of-home entertainment experience. If they don't pick up their game to better serve the market, he thinks they will be relegated to the economic junk heap.

There was no input from the public at 8:50 p.m.

Motion by Mr. DeWeese

Seconded by Ms. Whipple-Boyce to postpone the Final Site Plan and SLUP for 250 N. Old Woodward Ave, Emagine Palladium Theatre and Ironwood Grill to March 25, 2015, pending receipt of:
1. Detailed elevation drawings to illustrate the design of the proposed safety barrier or the panel that may be attached to the safety barrier;
2. Specification sheets and color selection for all proposed materials, which materials shall not include the use of spandrel glass or glass railings; and
3. Detailed signage drawings with dimensions to show the amount of proposed signage, as well as a section view to show the mounting details and projection information, as well as material and lighting specifications.

Also, staff getting the necessary information about the impact of this being a membership type organization and how it affects Planning and City Code.

No one from the public wished to speak about the motion at 8:54 p.m.

Motion carried, 6-0.

VOICE VOTE
Yeas: DeWeese, Whipple-Boyce, Clein, Jeffares, Lazar, Share
Nays: None
Absent: Boyle, Koseck, Williams

Planning Board Minutes
March 25, 2015

SPECIAL LAND USE PERMIT ("SLUP")
FINAL SITE PLAN REVIEW
250 N. Old Woodward Ave.
Emagine Palladium Theatre, and Ironwood Grill (postponed from March 11, 2015)
Application to allow a movie theatre, restaurant and bar serving alcoholic liquors in a portion of the former Palladium Theatre space

Ms. Ecker recalled that on March 11, 2015 the applicant appeared before the Planning Board. The Planning Board postponed the matter and requested additional information on the proposed membership theatre concept, an updated and ordinance compliant sign package with all required details, and design and material details on the proposed exterior changes on the fourth floor of the south elevation where open air dining is proposed. At this time the applicant has provided a detailed elevation of the fourth floor of the south elevation where open air dining is proposed. The applicant has removed all previously proposed spandrel glass and replaced it with metal panels, which are permitted.

Design Review
The applicant is proposing several design changes to the existing building. The changes proposed are to the design of the marquis itself, signage changes, and the removal of decorative metal elements and fixed windows at the new fourth floor. The applicant is proposing to remove the art deco metal design element from the top of the marquis as well as the changeable channel letter boards that were previously used to list movies being shown in the former Palladium Theatre. In addition, 40 ft. of the fourth floor fixed curtain wall windows are proposed to be replaced with a retractable Nanawall folding window system to provide an open air dining experience in the portion of the Ironwood Grill overlooking Hamilton St. above the existing marquis.

Ms. Ecker advised that an updated sign package has been received. However, Article 3 of the Zoning Ordinance provides that only one sign is permitted per entry for each business whose primary square footage is on the first story. ***As the primary square footage for both the Emagine Theatre and the Ironwood Grill is on the fourth story, the applicant will be required to obtain a variance from the Board of Zoning Appeals for all exterior entry signage.*** Further, the Planning Board must determine if a sign band is architecturally feasible above the theatre entry doors between the first and second floors. As the marquis is located in the area generally reserved for a sign band, the Planning Board may wish to approve it as an alternative design for the placement of signage.

In response to the chairman, Ms. Ecker advised there is currently nothing in the ordinance that prohibits a membership based theatre.

Mr. Paul Glantz, CEO of Emagine Entertainment, Inc., talked about their plans. They have now resolved to take a slightly different tact with respect to their membership concept. The approach now will be that customers can purchase a seat license that will allow preferential booking rights on Friday, Saturday, Sunday and certain holidays. Other than that, the venue

will be open to the public. They do not intend to impose a two-drink maximum restriction. Also, they plan to use low light surveillance cameras to monitor behavior.

Mr. Jason Gekiere, Tower Construction, Construction Manager for the project, explained that a small glass petition that sticks up provides an added level of protection within the curtain wall system. Mr. Michael Southen with Signature Associates, Consultant to Emagine Theatre, described the detail on the partition.

With respect to limiting the number of drinks that can be served to patrons, Mr. DeWeese thought the City could write the agreement to say if they start having problems the SLUP would come back up for review. Mr. Williams stated he is in favor of the project. A little elitism will ease the traffic flow in that neighborhood. Mr. Koseck encouraged the petitioner to take another look at the sign. He thought it could be better. Mr. DeWeese had the concern that the City Attorney should look at the membership concept before it goes to the City Commission.

At 8 p.m. no one from the audience wished to discuss this matter.

Motion by Mr. DeWeese
Seconded by Mr. Williams that the Planning Board recommends approval of the applicant's request for a Final Site Plan and a SLUP approval to permit Emagine Palladium Theatre and Ironwood Grill to operate at 250 N. Old Woodward Ave. with the following conditions:

1. Execute a contract with the City outlining the details of the proposed theatre and restaurant operations upon approval of the SLUP in accordance with the presentation made this evening;
2. Meet all City Department requests, subject to administrative approval;
3. Provide material specifications for the background sign panel on the marquis, and clarify all sign colors;
4. Obtain a variance from the Board of Zoning Appeals for all exterior entry signage;
5. Planning Board finds that the marquis is an architectural feature of the building, and is approved as an alternate design in lieu of a sign band; and
6. LED lighting on the Ironwood Grill signs must be mounted so that it is not visible through the open cut area.

No comments were heard from members of the public at 8:03 p.m.

Motion carried, 6-0.

ROLLCALL VOTE
Yeas: DeWeese, Williams, Clein, Jeffares, Koseck, Share
Nays: None
Abstain: Whipple-Boyce
Absent: Boyle, Lazar