MEMORANDUM

City Clerk's Office

DATE: **June 7, 2015**

TO: **Joseph A. Valentine, City Manager**

FROM: **Laura M. Pierce, City Clerk**

SUBJECT: **Special Event Request**
Farm to Table Block Party

Attached is a special event application submitted by the Community House requesting permission to hold the Farm to Table Block Party on Merrill and Bates on September 12, 2015.

The application has been circulated to the affected departments and approvals and comments have been noted. The special event regulations require applications to be submitted at least ninety days prior to the event. This application was received eighty-nine days prior to the event. Staff accepted the application as this is the first time the applicant has submitted a late application and it is a reoccurring event. The applicant will ensure the application is submitted on time next year.

The following events have been approved by the Commission. These events do not pose a conflict with the proposed event.

Event Name	Date	Location
Farmers Market	Sundays	Lot 6
Run on the Town 5K	Sept 12	Booth Park area
B'ham Street Art Fair	Sept 19-20	South Old Woodward
Birmingham in Stitches	Sept 19-28	Downtown Birmingham

SUGGESTED RESOLUTION:
To approve a request submitted by the Community House to hold the Farm to Table Block Party on Merrill and Bates on September 12, 2015, contingent upon compliance with all permit and insurance requirements and payment of all fees and, further pursuant to any minor modifications that may be deemed necessary by administrative staff at the time of the event.

#15-680 10428

RECEIVED BY
JUN 16 2015
CITY CLERK'S OFFICE
CITY OF BIRMINGHAM

CITY OF BIRMINGHAM
APPLICATION FOR SPECIAL EVENT PERMIT
PARKS AND PUBLIC SPACES

I. *EVENT DETAILS*

- Incomplete applications will not be accepted.
- Changes in this information must be submitted to the City Clerk, in writing, at least three weeks prior to the event

FEES:	**FIRST TIME EVENT:**	**$200.00**
	ANNUAL APPLICATION FEE:	**$165.00**

(Please print clearly or type)

Date of Application June 11, 2015

Name of Event Farm to Table

Detailed Description of Event (attach additional sheet if necessary)
Celebrate Michigan by sampling tastings from local chefs, breweries and wineries. Strolling block party with family fun activities, Michigan food vendors and farm products and produce.

Location Streets surrounding The Community House.

Date(s) of Event September 12, 2015 Hours of Event 4-8:00 p.m.

Date(s) of Set-up September 12, 2015 Hours of Set-up 1-3:00 p.m.

Date(s) of Tear-down September 12, 2015 Hours of Tear-down 8-9:00 p.m.

Organization Sponsoring Event The Community House

Organization Address 380 S. Bates

Organization Phone 248.644.5832

Contact Person Kathie Ninneman

Contact Phone 248.594.6403

Contact Email kathien@tchserves.org

II. EVENT INFORMATION

1. Organization Type Non-profit
   (city, non-profit, community group, etc.)

2. Additional Sponsors or Participants (Provide name, address, contact person, status, etc. for all additional organizations sponsoring your event.) Huntington Bank, Presenting Sponsor; PSD; Whole Foods, others are being solicited. Farm to Table has been approved as a Pure Michigan event.

3. Is the event a fundraiser? ☑ YES ☐ NO
   List beneficiary Outreach programs of The Community House
   List expected income $31,000 Net
   Attach information about the beneficiary.

4. First time event in Birmingham? ☐ YES ☑ NO
   If no, describe This will be the 3rd year for Farm to Table

5. Total number of people expected to attend per day 900-1000

6. The event will be held on the following City property: (Please list)
   ☐ Street(s) Bates from Martin to Townsend & Merrill from Bates to Chester
   ☐ Sidewalk(s) Sidewalks associated with the streets above
   ☐ Park(s) Shain Park for electrical hook ups only

7. Will street closures be required? ☑ YES ☐ NO

8. What parking arrangements will be necessary to accommodate attendance? Parking structures and street meters only.

9. Will staff be provided to assist with safety, security and maintenance? ☑ YES ☐ NO

Describe TCH staff and volunteers will be on site during the event.

10. Will the event require safety personnel (police, fire, paramedics)? ☐ YES ☑ NO

Describe

11. Will alcoholic beverages be served? ☑ YES ☐ NO On TCH Terrace only under our liquor license.

If yes, additional approval by the City Commission is required, as well as the Michigan Liquor Control Commission.

12. Will music be provided? ☑ YES ☐ NO

☑ Live ☑ Amplification ☐ Recorded ☐ Loudspeakers

Time music will begin 4:30 p.m.

Time music will end 7:00 p.m.

Location of live band, DJ, loudspeakers, equipment must be shown on the layout map.

13. Will there be signage in the area of the event? ☑ YES ☐ NO

Number of signs/banners Signage on each vendor booth (50). Small banners will be on the check in tables.

Size of signs/banners TBD

Submit a photo/drawing of the sign(s). A sign permit is required.

14. Will food/beverages/merchandise be sold? ☑ YES ☐ NO

- Peddler/vendor permits must be submitted to the Clerk's Office, at least two weeks prior to the event.
- All food/beverage vendors must have Oakland County Health Department approval.
- Attach copy of Health Dept approval.
- There is a $50.00 application fee for all vendors and peddlers, in addition to the $10.00 daily fee, per location. A background check must be submitted for each employee participating at the event.

LIST OF VENDORS/PEDDLERS

(attach additional sheet if necessary)

VENDOR NAME	GOODS TO BE SOLD	WATER HOOK-UP REQUIRED?	ELECTRIC REQUIRED?

III. EVENT LAYOUT

- Include a map showing the park set up, street closures, and location of each item listed in this section.
- Include a map and written description of run/walk route and the start/finish area

1. Will the event require the use of any of the following municipal equipment? *(show location of each on map)*

EQUIPMENT	QUANTITY	COST	NOTES
Picnic Tables		6 for $200.00	A request for more than six tables will be evaluated based on availability.
Trash Receptacles	20	$4.00 each	Trash box placement and removal of trash is the responsibility of the event. Additional cost could occur if DPS is to perform this work.
Dumpsters		$200.00 per day	Includes emptying the dumpster one time per day. The City may determine the need for additional dumpsters based on event requirements.
Utilities (electric)	TBD # of vendors requiring utilities	Varies	Charges according to final requirements of event.
Water/Fire Hydrant		Contact the Fire Department.	Applicant must supply their own means of disposal for all sanitary waste water. Waste water is NOT allowed to be poured into the street or on the grass.
Audio System		$200.00 per day	Must meet with City representative.
Meter Bags / Traffic Cones / Barricades	# to be determined by the Police Department.		

2. Will the following be constructed or located in the area of the event? ☑ YES ☐ NO
(show location of each on map) NOTE: Stakes are not allowed.

TYPE	QUANTITY	SIZE
Tents/Canopies/Awnings (A permit is required for tents over 120 sq ft)	8 x 10 Tent for each v	
Portable Toilets		
Rides		
Displays		
Vendors		
Temporary Structure (must attach a photo)		
Other (describe)		

SIGNATURE OF APPLICANT REQUIRED

EVENT NAME Farm to Table

EVENT DATE September 12, 2015

The Birmingham City Commission shall have sole and complete discretion in deciding whether to issue a permit. Nothing contained in the City Code shall be construed to require the City Commission to issue a permit to an applicant and no applicant shall have any interest or right to receive a permit merely because the applicant has received a permit in the past.

As the authorized agent of the sponsoring organization, I hereby agree that this organization shall abide by all conditions and restrictions specific to this special event as determined by the City administration and will comply with all local, state and federal rules, regulations and laws.

Kathi Zimmerman 6/15/15

Signature Date

IV. SAMPLE LETTER TO NOTIFY ANY AFFECTED PROPERTY/BUSINESS OWNERS

- Organizer must notify all potentially affected residential property and business owners of the date and time this application will be considered by the City Commission. *(Sample letter attached to this application.)*

- Attach a copy of the proposed letter to this application. The letter will be reviewed and approved by the Clerk's Office. The letter must be distributed at least two weeks prior to the Commission meeting.

- A copy of the letter and the distribution list must be submitted to the Clerk's Office at least two weeks prior to the Commission meeting.

- If street closures are necessary, a map must be included with the letter to the affected property/business owners.

THE COMMUNITY HOUSE
Teach · Connect · Help

June 17, 2015

Shain Park Realtors
260 Martin
Birmingham, MI 48009

Dear James and Kevin:

The Birmingham City Code requires that we receive approval from the Birmingham City Commission to hold the following special event. The code further requires that we notify any property owners or business owners that may be affected by the special event of the date and tie that the City commission will consider our request so that an opportunity exists for comments prior to this approval.

Name of Event: Farm to Table Block Party Food Fest

Location: Bates St. from Martin to Townsend and Merrill from Chester to Bates and on the Terrace of The Community House. The event will be held rain or shine outdoors.

Date of Event: September 12, 2015 **Hours of Event:** 4-8:00 p.m.
Date of Set - Up: September 12, 2015 **Hours of Set-Up:** 1-3:00 p.m.
Date of Tear-Down: September 12, 2015 **Hours of Tear-Down:** 8-9:00 p.m.

Date of City Commission meeting: Monday, July 13, 2015

The City commission meets in room 205 of the Municipal Building at 151 Martin at 7:30 p.m. A complete copy of the application to hold this special event is available for your review at the City Clerk's Office (248.530.1880). Log on to www.bhamgov.org/events for a complete list of special events.

Event Organizer: The Community House

Address: 380 S. Bates, Birmingham, MI 48009

Phone: 248.644.5832

Farm to Table - 2014

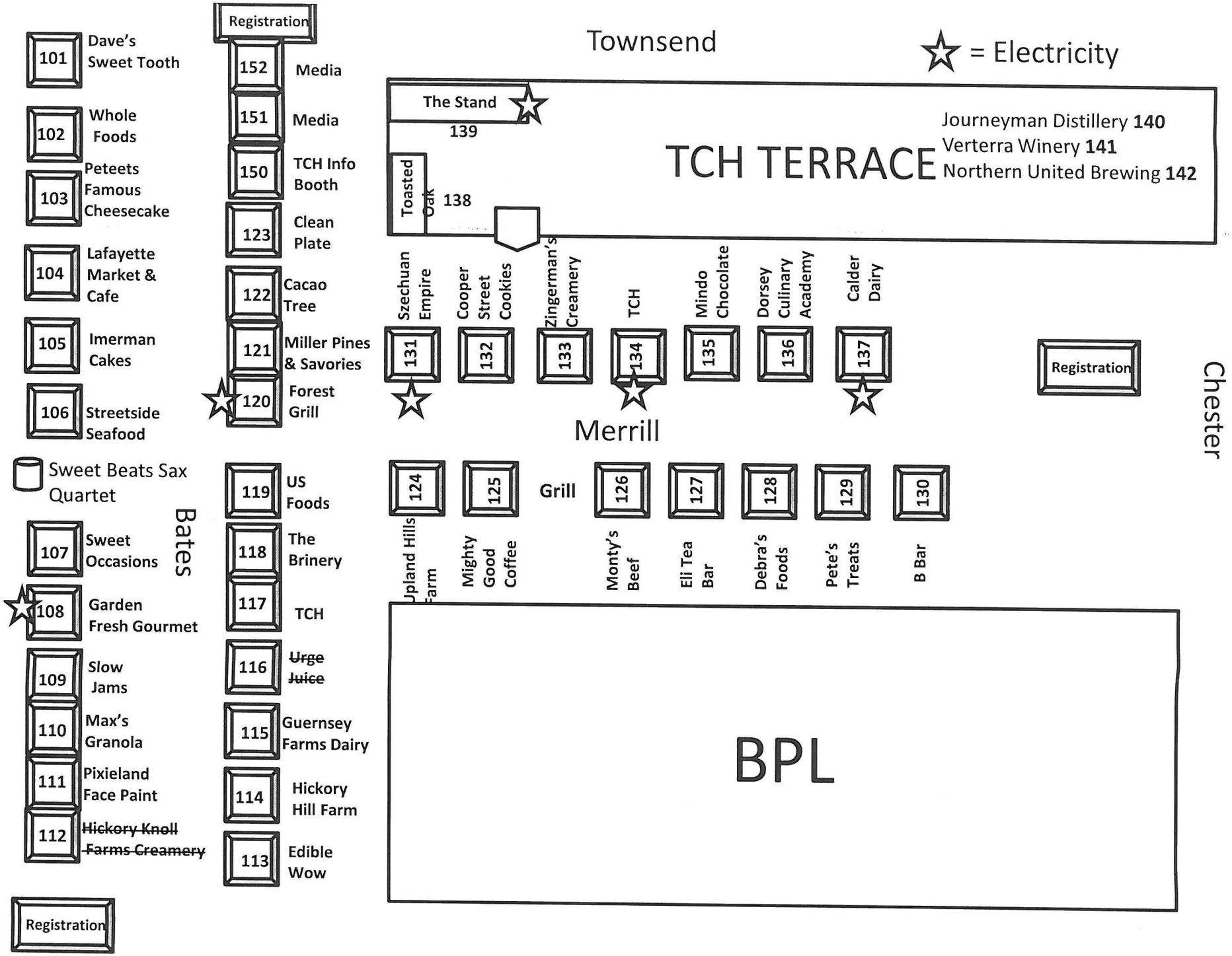

THE COMMUNITY HOUSE
Teach · Connect · Help

To the fullest extent permitted by law, The Community House and any entity or person for whom The Community House is legally liable, agrees to be responsible for any liability, defend, pay on behalf of, indemnify, and hold harmless the City of Birmingham, its elected and appointed officials, employees and volunteers and others working on behalf of the City of Birmingham against any and all claims, demands, suits, or loss, including all costs and reasonable attorney fees connected therewith, and for any damages which may be asserted, claimed or recovered against or from the City of Birmingham, its elected and appointed officials, employees, volunteers or others working on behalf of the City of Birmingham, by reason of personal injury, including bodily injury and death and/or property damage, including loss of use thereof, which arises out of or is in any way connected or associated with this activity/event. Such responsibility shall not be construed as liability for damage caused by or resulting from the sole act or omission of the City of Birmingham, its elected or appointed officials, employees, volunteers or others working on behalf of the City of Birmingham."

Applicant's Signature Kathie Nunnemaci Date 6/15/15

DEPARTMENT APPROVALS

EVENT NAME **Farm to Table**

LICENSE NUMBER **#15-00010428**

COMMISSION HEARING DATE: **July 13, 2015**

NOTE TO STAFF: Please submit approval by **June 26, 2015**

DATE OF EVENT: **Sept. 12, 2015**

DEPARTMENT	APPROVED	COMMENTS	PERMITS REQUIRED (Must be obtained directly from individual departments)	ESTIMATED COSTS (Must be paid two weeks prior to the event. License will not be issued if unpaid.)	ACTUAL COSTS (Event will be invoiced by the Clerk's office after the event)
BUILDING **101-000.000.634.0005** 248.530.1850	Bruce Johnson	Event organizer to contact Building Dept. to schedule a time for inspection of the event setup.	N/A	$85.46	
FIRE **101-000.000-634.0004** 248.530.1900	PENDING APPROVAL				
POLICE **101-000.000.634.0003** 248.530.1870	PENDING APPROVAL				
PUBLIC SERVICES **101-000.000-634.0002** 248.530.1642	Carrie Laird	Trash Containers Labor and Equipment for Barricade Placement.		$200	
ENGINEERING **101-000.000.634.0002** 248.530.1839	A.F.	Maintain five (5) foot clear pedestrian zone on all sidewalks. No drilling or pavement damage (road or sidewalks) allowed for tent supports	N/A	$0	
INSURANCE 248.530.1807	CA	Approved, pending receipt of current coverage	N/A	$0	

CLERK **101-000.000-614.0000** 248.530.1803	LP	Notification letters mailed by applicant on **6/29/15**. Notification addresses on file in the Clerk's Office. Evidence of required insurance must be on file with the Clerk's Office no later than **8/28/15**. Application submitted 89 days prior to event. 2016 must submit application at least 90 days prior to the event.	Applications for vendors license must be submitted no later than **8/28/15.**	$165 (pd)	
				TOTAL DEPOSIT REQUIRED **$285.46**	**ACTUAL COST**

FOR CLERK'S OFFICE USE

Deposit paid _____

Actual Cost _____

Due/Refund_____