City of Birmingham
A Walkable Community

MEMORANDUM

Department of Public Services

DATE: **July 29, 2015**

TO: **Joseph A. Valentine, City Manager**

FROM: **Lauren A. Wood, Director of Public Services**

SUBJECT: **DPS PLOW REPLACEMENTS #36 and #42**

DPS loader plows #36 and #42 are from 1997 and 2001 respectively. These are in need of replacement and are budgeted in the 2015-2016 Equipment Fund. The projected budget estimate per plow was $20,000. This purchase is from the sole source authorized dealer and distributor of this equipment, Southeastern Equipment Co., Inc.

We recommend the Henke FV 14' folding V plows rather than the 12' existing plows. The total cost of this purchase is $47,000.00 or $23,500.00 per plow. Attached is the quote and related literature for the Henke Folding V plows. Once the order is placed is will take approximately 60-90 days to be built and delivered. Funds are available in the Auto Equipment Fund, account #641.441.006-971.0100.

SUGGESTED RESOLUTION:
To waive the formal bidding requirements and approve the purchase of two Henke FV-14 loader plows as a sole source purchase from Southeastern Equipment Co., Inc. in the amount not to exceed $47,000.00. Funds for this purchase are available in the Auto Equipment Fund, account #641.441.006-971.0100.

Southeastern
Equipment Co., Inc.
48545 Grand River Ave.
Novi, MI 48374
248.349.9922 office phone
248.349.9191 office fax

7.29.15

City of Birmingham - 2015487
Attn: Ms. Lauren Wood
851 S. Eaton Street
Birmingham, MI 48009
248-530-1702

RE: Quote on Henke FV-14 Folding Plow

Please find the attached spec sheet and following body of specifications for your quote on the FV-14 Plow for your CASE 621 class wheel loaders.

(QT 1) Henke FV-14 -- Folding V-Plow $23,500.00

- Designed to accept machine down pressure from loaders and graders
- 48" high with 1/4" moldboard and 1/2" reinforcing ribs
- Swivel feature for uneven terrain
- Non tripping for light dozing, grading and snow removal
- Heavy-duty 3" center pin with greaseable hinge points
- (2) 4" bore x 20.5" stroke with 2" rod cylinders for independent wing operation
- Nitrogen accumulators to relieve each cylinder
- 3/4" x 6" carbon cutting edge
- Backplate with ACS coupler 2K/30 - 17"
- Folding V painted Case Power Tan

(2) auxiliary hydraulic valves required for Henke Folding V-Plow

Description - Running Gear

- 11" mushroom shoes

Description - Hydraulic Kits

- Hydraulic diverter kit* (Henke part # 6186102 - converts one auxiliary function into two)

* Includes in cab top button switch

Notes:

*No hosing, brackets, bulkheads, or couplers included unless otherwise noted above.

- Southeastern can install the plow assembly on the loaders for an additional $1,500 maximum and would need one of the loaders moved to our service facility in Novi to do so.

Delivery is 60-90 days after order is placed.

Submitted by:

Steve Clelland - Sales
Southeastern Equipment Company
Novi, MI 48374

PH: 248-207-6011
sclelland@southeasternequip.com

3-in-1. Done.

With the power of versatility, Henke's Folding V configures to your needs.

Find what we have for you.
888.682.9010 • www.henkemfg.com

HENKE

3070 Wilson, Leavenworth, KS 66048
913.682.9000 • 888.682.9010
913.682.0300 (Fax)
Visit us at henkemfg.com

Designed for Versatility, Engineered for Durability.

The Henke Folding Vee Plow is a Heavy Duty, Multi-Directional Dozer Blade for extreme duty use on wheel loaders and motor graders. Designed specifically to accept machine down-pressure from wheel loader arms or Henke motor grader parallel lift groups. Wheels*, paired with skid shoes, make the FV ideal for gravel and dirt surfaces - allowing the cutting edge to hover just above the road.

SPECIFICATIONS

Box Reinforced
Full Length 7" x 22.7#/ft S&C Center Channel
5.0" Center Pin Assembly of 1" DOM and a 3.0" Solid Steel, Cold Rolled Center Pin
Blade 48"H x 144"W x 130" Vee x 124" Angle
Weight: Approx. 3,970lbs as shown
12', 14', 16' Lengths
47" tall Moldboard

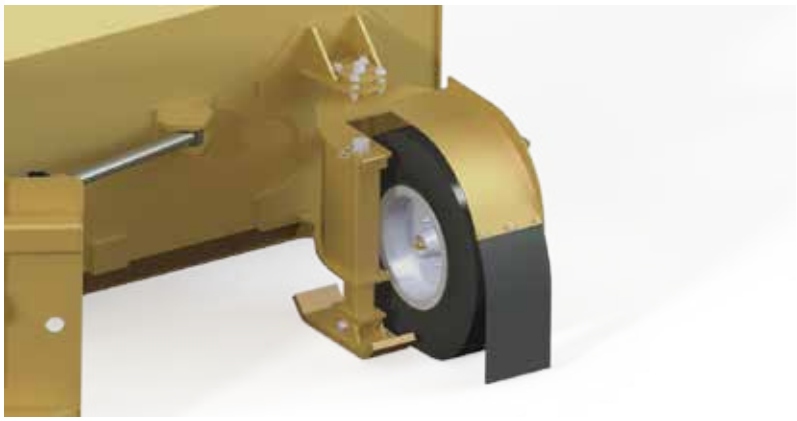

Wheels and Skid Shoes

FV14 with pneumatic wheels and extension shields (shown)
- Weight: Approx 5,800lbs

**Wheels available only on 14' and 16' models.*

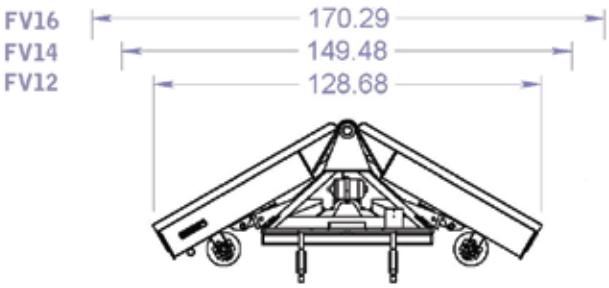

Vee

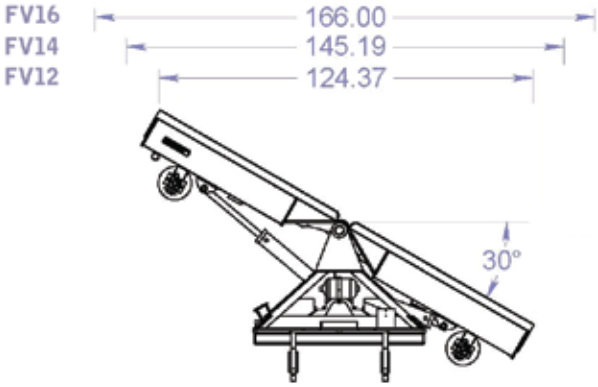

Reversed Right

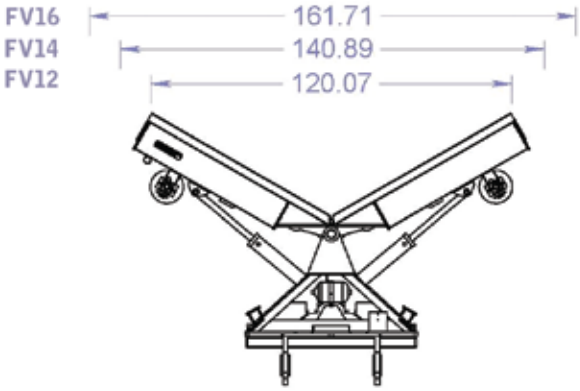

Scoop

Supporting You.

While you're out there keeping roads safe, Henke's got your back with knowledgeable support for each of our plows.