City of Birmingham
A Walkable Community

MEMORANDUM

Engineering Dept.

DATE: **August 31, 2015**

TO: **Joseph Valentine, City Manager**

FROM: **Paul T. O'Meara, City Engineer**

SUBJECT: **Parking Structure Traffic Control Equipment**
Contract #15-15(PK)

As you know, the maintenance and operation of the City's five parking structures is contracted to SP+ (until recently known as Central Parking). In addition to handling staffing, maintenance, and collections, SP+ is also responsible to ensure that all of the traffic control equipment at structure entrances and exits operates properly. The following is a brief summary of the equipment operation for daily traffic in our structures:

PRIOR TO 1997:

Like other controlled parking operations, Birmingham controlled traffic by the use of relatively simple equipment such as ticket spitters and gates at the entrances, and a cashier at the exit. All payments were in cash.

1997 – 2008:

In late 1996, the parking system implemented the rate structure still being used predominantly today, wherein the first two hours of a visit are free, and then the charge is $1 per hour up to $5. During committee discussion that led up to this change, there was an emphasis on implementing changes to make it a faster transaction for the customer. Exit verifiers were installed at all exits to allow customers to exit at any lane if they knew they had been there less than 2 hours, whether a cashier was present or not. These helped reduce wait times during exiting. Those that had to pay still had to use an attended cashier lane.

2008 – 2012:

With the increasing reliability and prevalence of cash payment machines, the City took the step of removing all cashiering at the Park St., Peabody St., and Chester St. Structures. The effort helped reduce labor costs substantially, as less SP+ staff had to be on hand at each parking structure. Cashiers were left at Pierce St. and N. Old Woodward Ave., as it was felt at the time that these locations would have a more difficult time being converted.

The complexity of the machines, and the value of the machines, increased significantly at this time. Payment machines built so that customers would walk up and pay before going to their car were placed in multiple locations to encourage transactions to occur before arriving to the

exit lane. However, if the customer did not pay in advance, the option of paying in the exit lane was always made available (usually with credit or debit card only – cash handling tends to slow down the operation).

2012 - PRESENT:

The transition to operating without cashiers went smoother than anticipated. In 2012, the remaining two cashier booths were taken out, and replaced with payment machines (cash, credit, or debit) under shelters in the exit lanes. These transitions went smoothly as well.

When the major transition to payment machines occurred in 2008, Birmingham was one of the first municipalities to operate a parking facility in this way in Michigan. While risks were involved, we felt that the relative sophistication of Birmingham clientele were ready for the change. Overall, the move has been a positive one, with a major savings resulting. The main drawback, as time goes on, is the reliability of the payment machines, particularly those that handle cash. The first cash machines are now over six years old, and some of them have caused ongoing problems for the operation and for customers when they are not functioning.

The machines were purchased through Traffic & Safety Control Systems, Inc., who is the sole local distributor for Amano/McGann equipment. Historically, parking operators in the Detroit area had two choices for equipment purchases and maintenance. Other than Traffic & Safety, another firm marketed and serviced Federal APD equipment. However, by the mid-2000's, Amano/McGann equipment was considered superior. It's product line was being modernized and invested in, and by this time, there was really no other choice but to work with Traffic & Safety. Having a monopoly in the local market was reflected in prices. At this time, a walk up cash payment machine cost over $70,000 each. With its many moving parts, these machines have been particularly vulnerable to ongoing maintenance problems.

During the 2008 upgrade, most of the existing equipment (gates, ticket spitters, exit verifiers) was either left in service or modified to operate with the new equipment. These efforts helped keep costs down. However, some of the equipment in service is now over 15 years old, and is becoming unreliable. While SP+ employs a full time maintenance person that focuses on repairing and maintaining the equipment, as its complexity has increased, the need for help from the experts at Traffic & Safety has increased. In fiscal year 2013/14 approximately $119,000 was spent in equipment maintenance. In fiscal year 2014/15, over $98,000 was paid to just Traffic & Safety to help repair equipment or replace parts. SP+ started talking with our office about the need for a complete system overhaul. The benefits of an overhaul at this time come from a few different angles:

1. Now that the local recession is over, other international firms have taken an interest in the Detroit market. While Amano/McGann equipment has been modernized recently, other equipment manufacturers are also now able to market and maintain their equipment in this area. Not only does this give Birmingham the opportunity to select other products, but it introduces true competition that was not there in the past, resulting in potentially major savings.
2. As with most things involving electronics, capabilities and choices are providing new and exciting features that were not available in the past. Customers can now set up accounts in Parkmobile, Google Wallet, and Apple Pay. These choices and features lead

us to believe that it may be time to eliminate cash from the system, as discussed further below.

INFORMAL BID

Acknowledging the ongoing maintenance problems with our current equipment, I directed SP+ to learn more about the current market, both what could be purchased, and what the costs would be. They felt that the only serious vendors that could compete in this market would be Amano/McGann, marketed and serviced by our traditional vendor Traffic & Safety, and Skidata, marketed and serviced by a relatively new company called Harvey Electronics.

1. Amano/McGann has within the last year introduced a new and improved line of parking control equipment. It offers several new features that were not available in the past. The Opus System from Amano McGann is currently being rolled out nationwide. However, very few locations are fully utilizing the new product. Because it is so new, the current lack of installations has not allowed SP+ to properly gauge the new features offered by the new equipment line.
2. Skidata, while new to the Detroit market, has been manufactured and installed in thousands of locations worldwide. In the United States, they have focused more on the larger markets of Los Angeles, Chicago, and New York. Now that they are established, they are moving into new areas such as Detroit.

SP+ put together a list of needs for both firms, and asked for proposals. Results were submitted, and reviewed with the Advisory Parking Committee (APC) in May. The report put together for the APC at that time is attached. While the Skidata package was higher priced, SP+ noted that installing a system at Chester St. that did not offer a cash payment option would make the cost differential minor. Labor and long term maintenance costs would also be reduced if a cashless option was implemented. After reviewing the issue, the APC recommended that the Chester St. Structure be upgraded to new Skidata cashless equipment first, as a pilot, before proceeding with ordering equipment elsewhere.

While we were preparing to move this idea forward to the City Commission, Traffic & Safety heard that we were preparing to purchase equipment from their competitor. They then submitted a revised quote where prices were cut further, and an unheard of five year warranty would be offered. At this point, the informal nature of these discussions became a concern for our office. Rather than proceeding, I asked SP+ to go back and prepare a formal bid package that both lists everything that is really needed for the system, to ensure that all vendors (including anyone else that may be interested) would be pricing the same level of equipment. That is, the amount of money involved in this demanded that a fair open bid process be run so that a true cost comparison can be obtained.

With assistance from our office, SP+ put together a bid package known as Contract #15-15(PK).

After reviewing the issue with the APC, staff was confident that running a cashless pilot at the Chester St. Structure is the direction that the City should go. Bidders were asked to give a price to install a cashless system at Chester St. soon after award (again as a pilot). A six month testing period would then be run to see how the new equipment works. (Chester St. was

selected as the pilot because the number of daily transactions is lower, and if there are problems with customers needing help, office staff is located at the entrance and exit area.) Bidders were then asked to provide a price for two options, to be installed about six months later. The two options would be to install a cash system at the remaining four structures, or a cashless system at the remaining four structures. Labor costs during the five years after installation was also to be calculated as a part of the bid.

Bids were due on August 14. Bid results are attached. Based on price, Amano/McGann is the lowest total cost for both options. If the City decides to go with cash payments in the remaining four structures, the Amano/McGann price difference is significant. However, if no cash payments are accepted system wide, the price difference between the three becomes smaller.

Staff feels that operating the system without cash is the direction the City should proceed. We feel confident that most customers have some form of electronic payment option available when they visit Birmingham. For those few that do not, the system will be able to offer a pre-paid debit card of its own for those that visit regularly. The Advisory Parking Committee also endorsed this approach. However, should the public reaction at Chester St. be too negative, the City will have the option to install cash machines at some or all of the other structures. Not offering cash not only reduces equipment purchase costs, it results in the following other operational benefits:

1. Labor: Several hours per day are used each day today collecting and handling cash from various points within the system. It is estimated that $36,000.00 in labor costs can be saved each year.
2. Tickets: The parking system issues 1.3 million tickets to customers each year. Current equipment uses mag-stripe tickets that result in costs in the area of $15,260.00 to stock every ticket spitter. Newer generation cash machines will issue bar coded tickets, but the special paper that they must be printed on also results in similar costs. When no cash option is provided, tickets are no longer necessary. Customers are identified upon entry, inserting their card or displaying their mobile payment device. They are asked to display the same payment method upon exit, so no other form of parker identification is required.
3. By removing both ticket handling and cash handling from the system, the complexity of the payment machines is significantly reduced. By simplifying the machines, it is expected that maintenance costs will drop and reliability will go up. (Many of the reliability problems currently being contended with have to do with moving parts.)

Finally, it is important to note that about 67% of all current paying customers (measured as amount of dollars collected) are selecting a credit/debit payment option over cash. This number is increasing each year. Once these other new payment options become available, we expect that cash would become even less desired (if we continued to offer a cash payment option).

Once the decision to move to a cashless platform is made, the cost difference between the three companies is relatively minor. Equipment features and long term reliability must be considered. SP+ has assembled several reasons why they feel that Skidata is the best choice (attached). While the Amano/McGann equipment also has several positive elements, it is new

to the market, and has not been time tested in the field. Finally, Tiba equipment is not as robust as Skidata. It is sold primarily in Israel (where it is made), and the United States. While it could meet our needs, it does not have its own barrier gates, nor the additional features (building access, digital videos), sophisticated look, and track record of the Skidata equipment, and is about the same cost as Skidata, it is not being recommended.

At the time the current budget request was prepared (nine months ago), we envisioned slowly transitioning the system to new equipment, focusing on one parking structure each year for five years. The budget requested $250,000 each year for five years, starting in 2015-16. After learning more about what would make the most sense, and the importance of operating a central updated system that works cohesively at all five structures, we now know that it is important that we proceed with a more timely conversion. At this time, an equipment replacement overhaul at the Chester St. Structure is recommended, using the Skidata equipment, at a price of $195,000. Funds for this work is budgeted. Once the equipment is installed and operating, the test period will begin to see how the new system works. We plan to summarize the findings of the test period in about six months with both the Advisory Parking Committee and the City Commission. At that time, a recommendation to purchase equipment at the remaining four parking structures will be forwarded.

SUGGESTED RESOLUTION:

To accept the recommendation of the Advisory Parking Committee to purchase new traffic control equipment at the Chester St. Parking Structure without cash payment being available, and to award Contract #15-15(PK), Parking Structure Traffic Control Equipment, to Skidata, approving the purchase of cashless payment equipment for the Chester Street Parking Structure in the amount of $195,000, charged to account #585-538.001-971.0100 (phase 1 of the contract). And further, to ask the Advisory Parking Committee to review the cashless system and return to the City Commission with a recommendation on whether to continue with the cashless system at the remaining parking structures, prior to awarding the remaining phase 2 of the contract.

City of Birmingham Contract #15-15(pk) PARCS comparison

Cash Option	Amano McGann	Ski Data	Tiba
Chester	$151,662.00	$195,000.00	$193,520.00
Pierce	$201,118.00	$271,000.00	$218,800.00
Park	$145,046.00	$200,000.00	$223,110.00
Peabody	$126,257.00	$206,000.00	$181,920.00
N. Old Woodward	$96,612.00	$148,000.00	$132,495.00
Subtotal	**$720,695.00**	**$1,020,000.00**	**$949,845.00**

Cashless Option	Amano McGann	Ski Data	Tiba
Chester	$151,662.00	$195,000.00	$193,520.00
Pierce	$169,080.00	$162,000.00	$152,760.00
Park	$129,772.00	$119,000.00	$112,760.00
Peabody	$110,984.00	$125,000.00	$106,150.00
N. Old Woodward	$82,632.00	$95,000.00	$108,375.00
Subtotal	**$644,130.00**	**$696,000.00**	**$673,565.00**

Labor	**Amano McGann**	**Ski Data**	**Tiba**
Years 1-2	$23,400.00	$23,400.00	Under Warranty
Years 3-5	$105,300.00	$87,150.00	$147,000.00
5 year cost cash (est.)	**$849,395.00**	**$1,130,550.00**	**$1,096,845.00**
5 year cost credit (est.)	**$772,830.00**	**$806,550.00**	**$820,565.00**

To: Paul O'Meara City Engineer

From: Joshua Gunn, Jay O'Dell SP+

Date: August 27, 2015

RE: PARCS Recommendation

SP+ is recommending SKIDATA equipment for the new Parking Access Revenue Control Systems. SKIDATA is tried and true in over 100 different countries and have just completed their 10,000th install. Their equipment is installed at many large parking facilities in the United States including Dallas Fort Worth International Airport, the 4th largest airport in the United States. SP+ manages multiple locations using SKIDATA PARCS and can attest to its ease of use and dependability. The following is a summary of the advantages we feel make the extra expense worth the investment, followed by more detailed explanations on pages 2 and 3.

Competitive advantages

I. Aluminum housings will not rust as our current equipment started to after just 2 years.
II. Centralized operating system contained on one server making it easier to respond to alerts and manage/monitor all structures.
III. Balancing peak demand - During high ingress/egress all the equipment will help process monthly passes, ticket pulls, payments, gate openings and closings instead of relying fully on the processing power of our main server.
IV. Alerts - Gates breaking, tickets getting low/running out, ticket or credit card jam, reader offline/not functioning - All these issues will alert our staff via an escalating text message and an alert on our operating system.
V. Upgrades - SKIDATA offers many products in their line not limited to but including building entry, License Plate Recognition, storage lockers accessed via cell phones with delivery capabilities.
VI. Compatible - All 3rd party vendors designed specifically to integrate with SKIDATA equipment. Integrates with Parkmobile, Google Wallet, Apple Pay.
VII. Rechargeable cards - For cashless locations people can purchase a rechargeable access card. It can be recharged at any SKIDATA pay machine, and our office.
VIII. Advertise on tickets and the screens of the pay stations can play short clips great for Day on the Town, Birmingham Ice Show, Village Fair, Holiday Tree Lighting, or sell/loan the air time to local businesses.

Expanded Competitive advantages

II. Centralized operating system

The centralized operating system we currently have is housed on 4 separate servers. To access information we may have to toggle between 3 of the 4 servers to help a single customer.

SKIDATA offers a duel server operating system that contains all operating information on one server while processing credit cards on a dedicated server to maintain PCI compliance. This will allow better, faster service to individuals experiencing problems at the entrance or exit.

III. Balancing peak demand

We currently experience high ingress around 9:00 AM and high egress around 5:00 PM. This high amount of traffic at one time taxes our current operating system which delays gate openings, and payment processing.

SKIDATA equipment works in tandem to balance the work load to all machines. Essentially every unit is an individual computer and the system will use the processing power of every pay station, entry, and exit unit so there is minimal delay during peak times. This will improve entry and exit times, lessen complaints, and provide a better overall parking experience.

IV. Alerts

As described above, there are several problems that can occur that require quick attention by our staff, such as a broken gate. Ticket jams are the most common. Our current alert system is located on one of four servers and must be visually seen by someone in the office if they happen to be on that particular server.

The new alert system will have the ability to send out a text message to our lead maintenance person. After a given amount of time it will escalate to the supervisor if the issue is not corrected. The system will also send an alert that the problem has been fixed and document how much time elapsed to remedy said alarm. The alarms issued include a broken gate, ticket jam, low tickets, out of tickets, ticket jam, motor failure on ticket acceptor, monitor failure, credit acceptor failure,

and door alarms. There are sensors on most pieces of the equipment that can fail which will alert the appropriate people when an error occurs.

V. Upgrades –There are numerous upgrades that SKIDATA can offer. The company started out as a ski lift operating software company which transitioned into building access equipment, large venue crowd control (stadiums/airports), and parking equipment. Features that could be explored in the future would include interconnecting a bike storage room with controlled access to the public, or even rented storage lockers for those wishing to use this feature.

VI. Compatible

SKIDATA is partnered with or makes all the components inside of their equipment as well as their software. To improve interactions with the public when they need help at gates, we specified the Commend intercom system. Commend is tailor made to SKIDATA and comes standard, unlike competitors. Diester Electronic is UHF (monthly card reader) which you will find in SKIDATA equipment. Parkmobile has been a huge success here in Birmingham; customers will now be able to use it to enter the garages as well as the meters. Google Wallet and Apple Pay use near field technology through mobile devices instead of customers pulling tickets.

VII. Rechargeable Cards

These cards will look and act like a monthly pass. It will act in lieu of a ticket upon entering the garage and debit the charge when the customer leaves the garage. Customers/business owners can pre-load these cards with $10, $50, $100 etc. and use it for entry and exit. Many of the large businesses who buy validations may find this attractive. They wouldn't have to daily hand out passes to employees or frequent guests. It may also be an option for those who frequent the downtown area. Customers will be able to recharge their "debit cards" at our office, or any pay station, and possibly online.

VIII Advertisements

The touch screen monitor will allow small videos to be played. This can be helpful to convey events happening downtown, important announcements, etc. We will have the capabilities to limit what time the video is allowed to play so it doesn't interfere with high traffic times. We can also control when the video plays and which machines will play said videos.

Picture may vary from actual product

Power.Gate

The universal multi-talent among parking columns offers comprehensive possibilities for the ticketing sector with the most modern and diverse ticket technology. Expand your business models; become part of urban solutions.

Power.Gate will support you at its best!

Your Business Card

- **High-Quality Design**

High-class materials and glowing features blend elegantly into all types of architecture.

- **Make a Lasting Impression**

Expert-optimized operational guidance for look and sound provide positive user experiences.

Marketing Terminal with Ticketing

- **Comprehensive Advertising Opportunities**

Get your equipment financed.

- **Professional Image**

A back-glowing, bright and high-resolution display effectively draws attention to logos, images and promo videos.

Optimize Your Investment

- **Suitable for Every Budget**

A customized solution for every application.

- **Protect Your Investment**

Future-proof due to flexible options for expansions and installations.

- **Save Money on Your Expenditures**

Smooth investment expansion and renewals thanks to the random miscibility of SKIDATA parking columns.

Efficiency Increase with Quality

- **Optimized Service Planning**

Great capacities and intelligent systems reduce your service efforts.

- **Elaborated Technology**

Touch-free RFID and barcode technology guarantee the highest level of reliability and low follow-up costs.

Save Money and Protect the Environment

- **Minimize Your Power Usage**

Situational energy saving modes and no heating above –20 °C (–4 °F) stand for a high energy effeiciency.

- **Recyclable Materials**

Ressource-efficient due to a high degree of reusability.

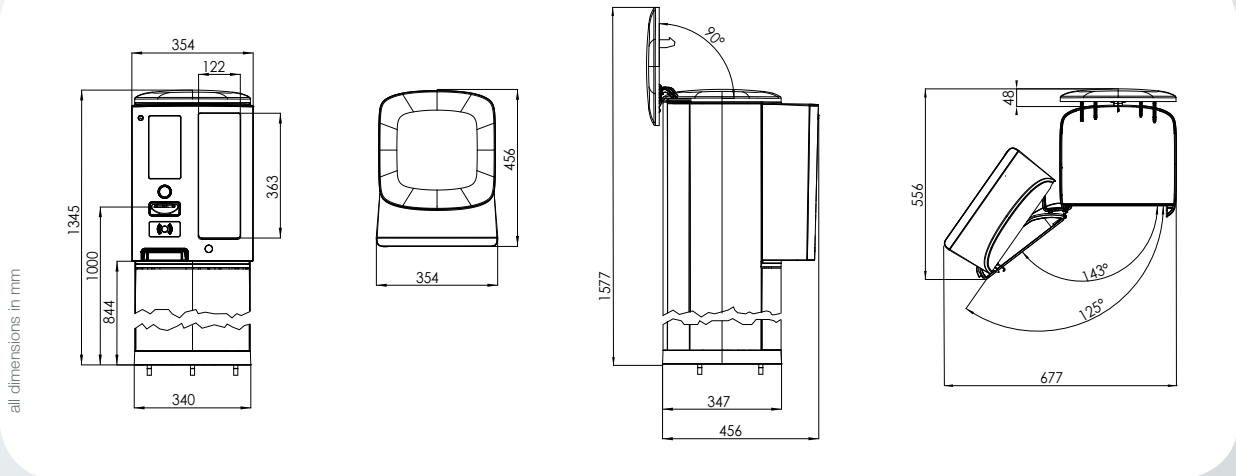

Features

Design/Construction

- Unique design based on aluminum and high-grade synthetics, complemented by optional, stylish light elements
- Modular, easy to maintain construction
- Flexible extension options ensure maximum investment protection
- Weather-proof, thanks to use of durable high-grade materials, such as aluminum
- Ethernet interface for efficient system integration
- Large installation space for add-on modules (e.g., PIN pad, credit card reader, etc.)

Operation

- Intuitive user interaction helps to ensure very high processing rates

Green Efficiency

- Optimised for low power consumption; no heating required down to –20 °C (–4 °F)
- Materials provide high degree of re-usability

Options

Design/Construction

- LED light bar serves as a stylish, illuminated eye-catcher
- Available in custom colors

Ticket Processing

- Coder Unlimited ensures flexible ticket processing
- Coder Basic enables cross-wise bar code ticket processing and punch-hole validation
- RFID module for reading and encoding 13 MHz Keycards
- Double ticket intake (up to 2 × 7000 tickets) with automatic data carrier management
- Large ticket collecting box (holds approx. 3000 tickets)
- Ticket separation ensures smooth, highly reliable ticket processing

Communication

- Analog intercom
- Integrated digital intercom (Ethernet)

Display

- Bright high-resolution graphics display ensures good readability under any light conditions; supports clear, vivid display of commercials and videos (with automatic brightness adjustment); 800 × 480 pixels
- Outdoor capable touch screen for additional Parking Column control functions (can be operated while wearing protective gloves)
- Sophisticated display modes support various applications and design options
- Illuminated control elements
- Visual and acoustic feedback provides additional user support

Accessories

- Locking system with mechanical or electronic locks, supports configurable access permissions
- Various contact and interface extensions to suit a wide range of requirements
- Heater for extremely low ambient temperatures

Technical Specifications	
Dimensions	354 mm × 1345 mm × 456 mm (B × H × T)
Weight	30 kg (without adapter base)
Operating voltage	100-240 V ±10 % / 50-60 Hz
Coding units	Coder Unlimited or Coder Basic
Operating temperature	–20 °C (–4 °F) to + 50 °C (122 °F) under sun exposure
Operating temperature with additional heater	–30 °C (–22 °F) to +50 °C (122 °F) under sun exposure (mandatory with Coder)
Operating temperature with additional heater big	–40 °C (–40 °F) to +50 °C (122 °F) under sun exposure
Max. ambient humidity	90 % (non-condensing)
Support stand color	Brushed, anodized aluminum
Cover color	RAL 7037 Dusty Grey (varnished plastic)
Pedestal base color	RAL 7043 Traffic Grey (powder-coated aluminum die cast)
Panel color	RAL 7021 Black Grey (varnished plastic)
Declarations / Certifications	CE, FCC, IC, $_{C}$NRTL$_{US}$
Degree of protection based on IEC 60529	IP43

SKIDATA AG • Untersbergstraße 40 • A-5083 Grödig/Salzburg
[t] +43 6246 888-0 • [f] +43 6246 888-7 • [e] info@skidata.com [w] www.skidata.com • Version 1.1 • 19.02.2014

©2014 SKIDATA AG. All rights reserved.
The content provided herein is subject to change and possible editorial errors. Country-specific versions may vary. SKIDATA® is a registered trademark of SKIDATA AG in the USA, the European Union and other countries. Terms and conditions of the authorized SKIDATA distributor apply. The operator is fully responsible for compliance with any legal provisions applicable to the operation of the products.

Picture may vary from actual product

Credit.Cash

The **cashless** option among SKIDATA pay-on-foot machines provides full cashless payment support **for your customers** – **it's easy, quick and secure**. Credit.Cash lets you present your business with a **modern design** while benefitting from **highly reliable technology** and **low maintenance costs.**

Credit.Cash – Your benefits

- **Cashless payment**
  Patrons can pay conveniently by credit card – no need for complicated cash management.
- **Smart looks**
  Present your business in a modern design based on your company colors.
- **Safe investment**
  Maximizing benefits at minimum risk.

Your business card

- **Demonstrating presence**
  Credit.Cash's modern design matches both contemporary and traditional architecture while giving your business proper exposure.
- **Individual style**
  Accentuate your unique corporate presence with your logo and company colors.

Utilizing potential

- **Modern ticketing**
  Take advantage of Print@Home, RFID, magstripe and barcode technologies.
- **Planned growth**
  Easy-to-install extension options support new business models and numerous co-operation options.

Eliminating risks

- **Intelligent key management**
  Operator.Services 'Webkey' brings full transparency to your key management.
- **Refined technology**
  Internationally proven technology guarantees high reliability and availability.
- **No initial cash required**
  Easily cut costs and risks.

Paying cashless

- **Cashless payment made easy, fast and secure**
  No need to handle cash – and accounting gets easier, too!
- **Make the cost efficiency work for you!**
  Increase your presence through several cost-efficient pay-on-foot machines

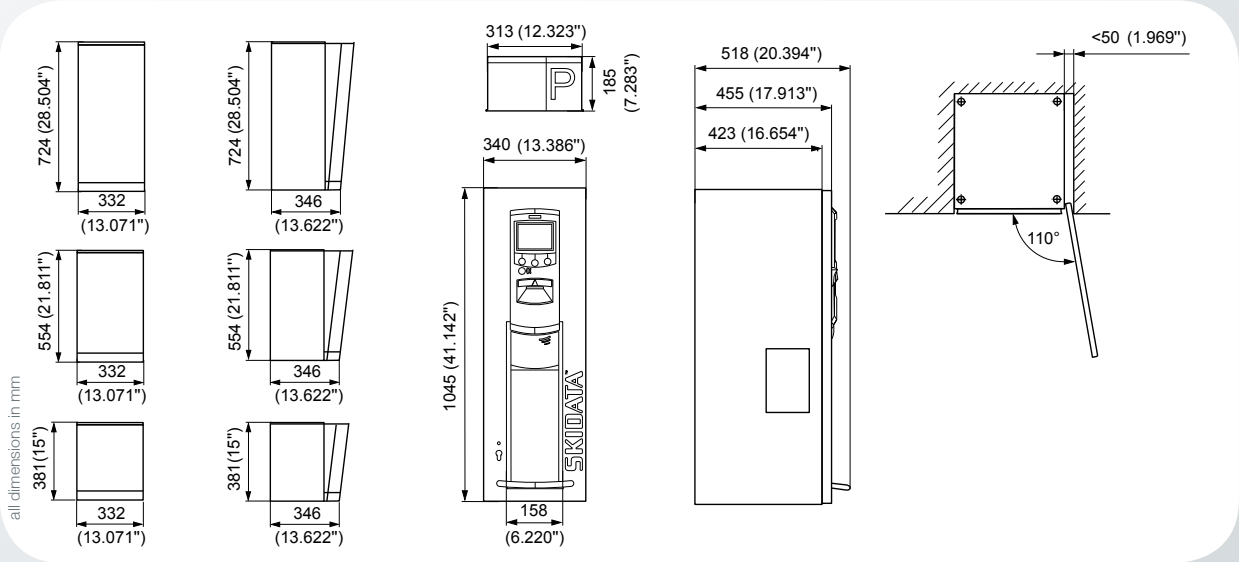

Features

Design/Structure

- Compact, modern design
- Basic unit powder coated steel enclosure and design elements made from polycarbonate
- Expansion bays for add-on components, such as pin pad, credit card terminal, and fiscal printer
- Analog intercom station, alarm function, call button and 3 soft keys, buffer memory (ensures proper transaction management in case of power failure)
- Heater, cooling fan, and power supply
- Issuing of up to 3000 receipts
- Control unit, complete with hard disk

Operation

- TFT 14.5 cm (5.7'') color display, break-proof monitor screen
- Ergonomically arranged user interaction controls
- User guidance with graphic color display and illuminated pictograms
- Users can switch on-screen language at any time
- Extremely easy to operate by staff

Options

Design/Structure

- Illumination attachment (integrated “Parking” sign, space for custom logo or other symbols)
- Pedestal (optionally with or without front door panel)
- Pedestal “elevated” (optionally with or without front door panel)
- Wall-mount console

Coder/ticket technology

- Coder Unlimited (supported data carrier formats depend on modules selected)
- Coder Basic (for cross-wise barcode and validation via hole punch)
- RFID Module (for reading and writing/coding of keycards)
- Print@Home Scanner

Technical Specifications

Dimensions	340 mm x 1045 mm x 455 mm / 13.39" x 41.14" x 17.91" (w x h x d) – without pedestal
Height with Pedestal “elevated”	1769 mm / 69.65"
Power supply	230 V AC / 50 Hz; 120 V AC / 60 Hz
Power consumption	600 W (with heater on)
Temperature range during operation	–25 °C to +50 °C (–13 °F to +122 °F) ambient temperature; unit not directly exposed to sunlight
Color of enclosure and illumination attachment	RAL 9007 (gray aluminum)
Color of plastic front-panel elements	RAL 7043 (traffic gray B)
Color of front panel	RAL 9007 (gray aluminum), RAL 7021 (black-gray)
Color of pedestal	RAL 7021 (black-gray)
Ticket slot	Pantone 114 U (yellow)
Supported data carrier formats	SKIDATA barcoded, magstripe, keycard ISO/ISO RFID
Declarations / Certifications	CE, $_{c}$UL$_{US}$ (only 120 V-option), FCC, ADA (in combination with pedestal APM STD BASE item code: 946010700)

SKIDATA, Inc. • One Harvard Way, Suite 5, Hillsborough • NJ 08844
[t] (908) 243-0000 • [f] (908) 243-0660 • [e] info.usa@skidata.com [w] www.skidatausa.com • Version 4.6 • 10.07.2012

© 2012 SKIDATA AG. All rights reserved.
The content provided herein is subject to change and possible editorial errors. Country-specific versions may vary. SKIDATA® is a registered trademark of SKIDATA AG in the USA, the European Union and other countries. Terms and conditions of the authorized SKIDATA distributor apply. The operator is fully responsible for compliance with any legal provisions applicable to the operation of the products.

PARKING ACCESS AND REVENUE CONTROL SYSTEM

CONTRACT #15-15(PK)

CITY OF BIRMINGHAM

ENGINEERING DEPARTMENT

Contractor's Name:_____

PARKING ACCESS AND REVENUE CONTROL SYSTEM
CONTRACT #15-15(PK)
INDEX

100 Proposal _____ 6 Pages

110 Contract _____ 2 Pages

120 Performance Bond _____ 2 Pages

130 Payment Bond _____ 2 Pages

140 Payment Forms _____ 6 Pages

Request For Partial Payment
Request For Final Payment
Sworn Statement
Work Directive

200 Advertisement_____1 Page

301 Supplemental Instructions to Bidders _____ 5 Pages

310 General Instructions to Bidders _____ 6 Pages

400 General Requirements _____ 18 Pages

900 Supplemental Specifications _____ 31 Pages

SUPPLEMENTAL INFORMATION

Iran Sanctions Act Vendor Certification Form _____ 1 Page

PARKING ACCESS AND REVENUE CONTROL SYSTEM
CONTRACT #15-15(PK)

TO THE CITY OF BIRMINGHAM, MICHIGAN:

The undersigned, being familiarized with the local conditions affecting the cost of the work and the Contract Documents including all those sections listed in the Index, and the addenda listed below, hereby proposes to perform everything noted herein and to provide and furnish all labor, materials, and equipment, except as otherwise specified, necessary to construct and complete in a workmanlike manner all of the work required to be performed for **Parking Access and Revenue Control Equipment, Contract #15-15(PK)** in conformance with the requirements shown or implied in the above contract documents all of which are hereby made a part of this contract for the following price as here stated and further defined in the specifications. **Bidder must write out in words the lump sum prices to complete the work on this project.**

Bidder has examined copies of all Contract Documents and of following addenda:

Date	Addendum Number

BASE BID

Having carefully considered the proposed form of agreement, invitation for bids, instructions to bidders, general terms and conditions, specifications, addenda, related drawings, alternates, site visitations and any conditions affecting the work, the undersigned proposes to furnish all labor, material, tools, equipment and machinery to complete the entire project for the lump sum of:

Phase One

Chester structure cashless $ $195,000.00

Phase Two Cash Option	Option 1 Cash	Option 2 Cashless
Pierce	$ 271,000.00	$162,000.00
Park	$200,000.00	$119,000.00
Peabody	$ 206,000.00	$125,000.00
N. Old Woodward	$148,000.00	$95,000.00
Subtotals Phase Two	$825,000.00	$501,000.00
Labor Analysis		
Labor Cost Years 1-2	300 Hours X $78.00 =	$23,400.00
Labor Cost Years 3-5	1,050 Hours X $83.00' =	$87,150.00
Subtotal Hours		$
Total Cost $	Option 1	Option 2
Phase One	$195,000.00	$195,000.00
Phase Two	$825,000.00	$501,000.00
Labor	$	$
Total Bid	$1,020,000.00	$696,000.00

VOLUNTARY ALTERNATES

VOLUNTARY ALTERNATE NO. 1
Description (Attach Additional Sheets if Necessary) _____

_____

_____

Add the sum of _____

_____ ($ _____)

Deduct the sum of _____

_____ ($ _____)

VOLUNTARY ALTERNATE NO. 2
Description (Attach Additional Sheets if Necessary) _____

_____

_____

Add the sum of _____

_____ ($ _____)

Deduct the sum of _____

_____ ($ _____)

These, and/or any other bid alternates may or may not be awarded with the contract at the sole discretion of the City.

Any additional work to this contract will be billed at the rates provided on the "Additional Work Rates" page section of this bid form, and in accordance with the General Requirements of the contract documents.

If the City accepts this proposal and awards the contract, the undersigned will submit a **Schedule of Values** outlining the major work items required for this project, and the accompanying values, prepared in accordance with the Supplemental Instructions to Bidders.

Accompanying this proposal is a certified check, bid bond or bank draft in the amount of five (5) percent of the total bid, payable to the City of Birmingham, Michigan, which it is agreed will be forfeited to the City of Birmingham if the undersigned fails to enter into a contract in conformity with the form of contract incorporated herein, and furnish bonds and insurance as specified within twenty-one (21) days after the contract is awarded to the undersigned or withdraws this bid within sixty (60) days of the date hereof.

In submitting this bid, it is understood that the right is reserved by the City of Birmingham, Michigan to reject any or all bids.

The undersigned hereby agrees to execute a contract with the City of Birmingham, Michigan according to the forms attached hereto and furnish the required bonds, all within twenty-one (21) days after the award of the contract; and will fully complete all work as stated under TIME OF COMPLETION, PHASING OF THE WORK and LIQUIDATED DAMAGES in Supplemental Instructions to Bidders.

The Bidder will identify the business entity as individuals, or if doing business under assumed name, indicate assumed name, partnership (naming partners) and indicate official capacity of persons executing proposal and bid.

Contractor's Name _Harvey Electronics and Radio LLC_____

Street Address _28243 Beck Rd B16_____City

Wixom_____ County _Oakland_____

State/Zip Code _Michigan 48393_____Telephone

_248-477-7200_____ FAX _248-477-7566_____

Email_Jason@harveyec.com_____

Federal Identification Number _30-0571718_____

Date _August 14'th 2015_____

Signed by _____

Print Name _Benjamin Miller_____

Title _President_____

If a corporation, give state in which incorporated _Michigan_____

Witnessed: Joyce Prisbylla

Print Name: _Joyce Prisbylla_____

Name of Superintendent _Matthew Schaft_____
Supervision & time sequence according to the General Requirements

Give below at least three references as to ability to do work proposed.

Name Joe Morehouse
Address 150 S. 5th Ave. Suite 301, Ann Arbor, MI 48104
Firm Ann Arbor DDA
Telephone 734-997-1309

Name Caleb Sharrow
Address 430 Abbot, East Lansing 48823
Firm City of East Lansing
Telephone 517-337-1277

Name David Albright
Address 22100 Telegraph Rd, Southfield, MI 48033
Firm Shaw Electric
Telephone 248-228-2000

Give below the last five projects worked on, including those currently in progress, in chronological order. The names need not all be different from those listed above:

Project #1: Name of Project: Upland Green
Date Started 8-1-2015
Finished In Progress
Name Jeff Meek
Address 38705 Seven Mile #400 Livonia, MI 48152
Firm Jeffrey D Meek and Assoc.
Telephone 734-953-0200

Project #2: Name of Project: City of Birmingham Equipment move
Date Started 7-27-2015
Finished 8-14-2015
Name Josh Gunn
Address 180 Chester Street Birmingham 48009
Firm SP Plus
Telephone 248-540-9690

Project #3: Name of Project: Plymouth Roadhouse
Date Started 8-11-2015
Finished 8-14-2015
Name Barbra McCann
Address 34101 Plymouth Road Livonia, MI 48150
Firm Plymouth Roadhouse
Telephone 734-421-7744

Project #4: Name of Project: Meadowbrook Commons

Date Started 8-4-2015 Finished 8-15-2015

Name Tom Gordon Address 25075 Meadowbrook Novi, MI 48375

Firm Meadowbrook Commons Telephone 248-305-8646

Project #5: Name of Project: Republic Parking Chatanooga

Date Started 8-5-2015 Finished In Progress

Name Kristin King Address 611 Chestnut street #150 Chatanooga, TN 37450

Firm Republic Parking Telephone 423-265-3218

Give below all the subcontractors to be used on the project: If additional space is necessary, please use the back of this page. Should the contractor wish to use any subcontractors that are not on this list after award, the contractor shall submit a written request to the Engineer and obtain authorization for same, prior to proceeding. All subcontractors not listed must receive written approval from the City of Birmingham, prior to working on this project.

Name_____ Address_____

Firm_____ Telephone_____

Type of Work to be Performed: _____

Name_____ Address_____

Firm_____ Telephone_____

Type of Work to be Performed: _____

Name_____ Address_____

Firm_____ Telephone_____

Type of Work to be Performed: _____

Name_____ Address_____

Firm_____ Telephone_____

Type of Work to be Performed: _____

Name_____ Address_____

Firm_____ Telephone_____

Type of Work to be Performed: _____

Name_____ Address_____

Firm_____ Telephone_____

Type of Work to be Performed: _____

ADDITIONAL WORK RATES.

Billing Rates:

The Straight Time rate includes fringe benefits.

The premium time rate will be the rate times the multiplier (less the fringe benefits).

Straight Time: (X 1)

Installer Billing Rate: $ 75.00

Helper Billing Rate: $ 50.00

Team Billing Rate: $ 125.00

Normal Overtime: (X 1.7 less fringe benefits):

Installer Billing Rate: $ 112.50

Helper Billing Rate: $ 75.00

Team Billing Rate: $ 187.50

Double Overtime: (X 2 less fringe benefits):

Installer Billing Rate: $ 150.00

Helper Billing Rate: $ 100.00

Team Billing Rate: $ 250.00

END OF SECTION

IRAN SANCTIONS ACT VENDOR CERTIFICATION FORM

For East Side Sewer Video Inspection Project

Pursuant to Michigan Law and the Iran Economic Sanction Act, 2012 PA 517 ("Act"), prior to the City accepting any bid or proposal, or entering into any contract for goods or services with any prospective Vendor, the Vendor must certify that it is not an "Iran Linked Business", as defined by the Act.

By completing this form, the Vendor certifies that it is not an "Iran Linked Business", as defined by the Act and is in full compliance with all provisions of the Act and is legally eligible to submit a bid for consideration by the City of Birmingham.

Benjamin Miller	08/14/2015
PREPARED BY (Print Name)	**DATE**
President	08/14/2015
TITLE	**DATE**
	Ben@harveyec.com
AUTHORIZED SIGNATURE	**E-MAIL ADDRESS**
Harvey Electronics And Radio LLC	
COMPANY	
28243 Beck Rd, Wixom, MI 48393	248-477-7200
ADDRESS	**PHONE**
NAME OF PARENT COMPANY	**PHONE**
ADDRESS	
30-0571718	
TAXPAYER I.D.#	

Thursday, August 20, 2015
Mr. Josh Gunn
SP Plus
180 Chester Street
Birmingham, MI 48009

Credit Card Only Equipment List

Chester Street Garage

5 - Skidata Barrier Gates With Folding Arms
2 - Skidata CC Entry Columns
3 – Skidata CC Exit Paystations
5 – Skidata EMV Chip Readers
5 – Skidata NFC Readers
5 – Skidata Barcode Scanners
1 – Skidata Software
6 – Axis 3364 VE Cameras
5 – Commend Substations
1 – Commend Virtuosis Host Software
1 – Commend EE 900 Office Master
1 – Dell Server with VM Ware and Windows Server
1 – Daktronics 4 Digit Variable Message Sign
1 – Cisco meraki MX 64 Security Appliance W/one year subscription for updates
1 – Cisco 3750 24 Port POE Switch
5000- Skidata Access Cards
2 – 40" Samsung video monitors (or equivalent, based on office size requirements)
1 – Year of Credit Card Security updates.
1 – Initial Credit Card Setup
10 – Vehicle Detection Loops

Peabody Garage

4 - Skidata Barrier Gates With Folding Arms
2 - Skidata CC Entry Columns
2 – Skidata CC Exit Paystations
4 – Skidata EMV Chip Readers
4 – Skidata NFC Readers
4 – Skidata Barcode Scanners
4 – Axis 3364 VE Cameras
4 – Commend Substations
1 – Daktronics 4 Digit Variable Message Sign
1 – Cisco meraki MX 64 Security Appliance W/one year subscription for updates
1 – Cisco 3750 24 Port POE Switch
1 – Year of Credit Card Security updates.
1 – Initial Credit Card Setup
6 – Vehicle Detection Loops

Park Street Garage

4 - Skidata Barrier Gates With Folding Arms
2 - Skidata CC Entry Columns
2 – Skidata CC Exit Paystations
4 – Skidata EMV Chip Readers
4 – Skidata NFC Readers
4 – Skidata Barcode Scanners
4 – Axis 3364 VE Cameras
4 – Commend Substations
1 – Daktronics 4 Digit Variable Message Sign
1 – Cisco meraki MX 64 Security Appliance W/one year subscription for updates
1 – Cisco 3750 24 Port POE Switch
1 – Year of Credit Card Security updates.
1 – Initial Credit Card Setup
6 – Vehicle Detection Loops

Cash & Credit Card Equipment List

Chester Street Garage

5 - Skidata Barrier Gates With Folding Arms
2 - Skidata CC Entry Columns
3 – Skidata CC Exit Paystations
5 – Skidata EMV Chip Readers
5 – Skidata NFC Readers
5 – Skidata Barcode Scanners
1 – Skidata Software
6 – Axis 3364 VE Cameras
5 – Commend Substations
1 – Commend Virtuosis Host Software
1 – Commend EE 900 Office Master
1 – Dell Server with VM Ware and Windows Server
1 – Daktronics 4 Digit Variable Message Sign
1 – Cisco meraki MX 64 Security Appliance W/one year subscription for updates
1 – Cisco 3750 24 Port POE Switch
5000- Skidata Access Cards
2 – 40" Samsung video monitors (or equivalent, based on office size requirements)
1 – Year of Credit Card Security updates.
1 – Initial Credit Card Setup
10 – Vehicle Detection Loops

Peabody Garage

4 - Skidata Barrier Gates With Folding Arms
2 - Skidata CC Entry Columns
2 – Skidata CC Exit Paystations
1 – Skidata Cental Pay POF
1 – Skidata Central Pay CC Only POF
6 – Skidata EMV Chip Readers
6 – Skidata NFC Readers
6 – Skidata Barcode Scanners
8 – Axis 3364 VE Cameras
6 – Commend Substations
1 – Daktronics 4 Digit Variable Message Sign
1 – Cisco meraki MX 64 Security Appliance W/one year subscription for updates
1 – Cisco 3750 24 Port POE Switch
1 – Year of Credit Card Security updates.
1 – Initial Credit Card Setup
6 – Vehicle Detection Loops

Pierce Garage

6 - Skidata Barrier Gates With Folding Arms
3 - Skidata CC Entry Columns
2 – Skidata CC Exit Paystations
1 – Skidata Exit Paystation
2 – Skidata CC only Central Paystations
8 – Skidata EMV Chip Readers
8 – Skidata NFC Readers
8 – Skidata Barcode Scanners
8 – Axis 3364 VE Cameras
8 – Commend Substations
1 – Daktronics 4 Digit Variable Message Sign
1 – Cisco meraki MX 64 Security Appliance W/one year subscription for updates
1 – Cisco 3750 24 Port POE Switch
1 – Year of Credit Card Security updates.
1 – Initial Credit Card Setup
12 – Vehicle Detection Loops

Woodward Garage

4 - Skidata Barrier Gates With Folding Arms
2 - Skidata CC Entry Columns
1 – Skidata CC Exit Paystations
1 – Skidata Exit Paystation
4 – Skidata EMV Chip Readers
4 – Skidata NFC Readers
4 – Skidata Barcode Scanners
4 – Axis 3364 VE Cameras
4 – Commend Substations
1 – Daktronics 4 Digit Variable Message Sign
1 – Cisco meraki MX 64 Security Appliance W/one year subscription for updates
1 – Cisco 3750 24 Port POE Switch
1 – Year of Credit Card Security updates.
1 – Initial Credit Card Setup
6 – Vehicle Detection Loops

Park Street Garage

4 - Skidata Barrier Gates With Folding Arms
2 - Skidata CC Entry Columns
2 – Skidata CC Exit Paystations
1 – Skidata Central POF Paystation
1 – Skidata CC only Central Paystation
6 – Skidata EMV Chip Readers
6 – Skidata NFC Readers
6 – Skidata Barcode Scanners
8 – Axis 3364 VE Cameras
4 – Commend Substations
1 – Daktronics 4 Digit Variable Message Sign
1 – Cisco meraki MX 64 Security Appliance W/one year subscription for updates
1 – Cisco 3750 24 Port POE Switch
1 – Year of Credit Card Security updates.
1 – Initial Credit Card Setup
6 – Vehicle Detection Loops

PARKING ACCESS AND REVENUE CONTROL SYSTEM
PROJECT - #15-15(PK)

CONTRACT

THIS AGREEMENT made the ___ day of _____, 2015, by and between the CITY OF BIRMINGHAM, Oakland County, Michigan, hereinafter called the "City", and _____of the City of_____, County of_____, State of _____hereinafter called the "Contractor", relative to Contract No. 15-15(PK), otherwise known as: Parking Access and Revenue Control System in the amount of $ _____ to wit:

1. The documents consisting of RFP, including all exhibits and the General Contract Conditions, and the Bid shall be incorporated herein by reference, shall become a part of this Agreement, and shall be binding upon both parties hereto. In the event that there is a conflict between these documents, this Agreement shall control, then the RFP, and then the Bid.

2. The Contractor shall furnish all labor, materials and appliances necessary, and to all the work as set forth in the Proposal, and in accordance with the plans and specifications, which have been made a part of this agreement in a manner, time and place, as therein set forth.

   a. The Contractor shall provide a Performance Bond, which form is attached hereto and incorporated herein by reference to protect the City, and conditioned upon the faithful performance of the contract in accordance with the plans, specifications and terms hereof.

   b. The Contractor shall provide a Payment Bond which form is attached hereto and incorporated herein by reference for the protection of the claimants as defined in MCL §129.201(6) to supply labor or materials to the principal Contractor or his Subcontractor and the prosecution of the work provided for in this contract.

3. Time is of the essence of this agreement. All of the work to be performed by the Contractor shall be completed on or before the Time of Completion, as set forth in the Supplemental Instructions to Bidders. The Contractor shall pay to the City as liquidated damages, the amount per day as set forth under Liquidated Damages in the Supplemental Instructions to Bidders, for each calendar day after the date specified under Time of Completion that the work to be performed by the Contractor is not completed. Liquidated damages are established because of the difficulty in ascertaining actual damages which the City might sustain, and are not intended as a penalty.

4. The City promises and agrees to pay said Contractor for all labor, materials and appliances supplied, and for all work performed under this agreement at the unit prices provided in the attached Proposals and Specifications.

5. For the faithful performances of the terms of this agreement, said parties respectively bind themselves, their successors, heirs, executors, administrators and assigns.

IN WITNESS WHEREOF, the parties execute this agreement as of the day and year first written above.

CITY OF BIRMINGHAM

Attest _____ By: _____
City Clerk Mayor

Witnessed _____ _____

By: _____

_____
Contractor

APPROVAL (1.135 City Code)

_____
City Manager as to Substance

_____
City Attorney as to Form

_____
Director of Finance as to Financial Obligation

_____
City Engineer

PARKING ACCESS AND REVENUE CONTROL SYSTEM
PROJECT - #15-15 (PK)

PERFORMANCE BOND

KNOW ALL MEN BY THESE PRESENTS that we, the undersigned _____

_____

as Principal, and _____

as Sureties, are hereby held and firmly bound unto the **CITY OF BIRMINGHAM, MICHIGAN** in the sum of _____ Dollars ($_____), in lawful money of the United States, for the payment of which we hereby jointly and severally bind ourselves, our heirs, executors, administrators, successors and assigns this _____ day of _____, 20_____.

WHEREAS, the above bounded Principal has entered into a certain written contract with the above named City of Birmingham, Michigan dated _____ day of _____, 20_____ for the construction of _____

_____

_____,

which contract is hereby referred to and made a part hereof as fully and to the same extent as if the same were entirely written herein,

AND THE SAID SURETY, for value received, hereby stipulates and agrees that no change, extension of time, alteration or addition to the terms of the contract or to the work to be performed thereunder of the specifications accompanying the same shall in anywise affects its obligations on this bond, and it does hereby waive notice of any such change, extension of time, alteration or addition to the terms of the contract, or to the work or to the specifications.

NOW, THEREFORE, the condition of the above obligation is such that if the Principal shall fully perform the annexed contract according to the terms thereof, or as such terms may be changed or modified by mutual agreement, and shall guarantee all work furnished against all defects and incidental damage to other property for a period of one (1) year following final acceptance of the work, then this obligation shall be void, otherwise the same shall remain in full force and effect.

This Bond is provided in compliance with and subject to the provisions of Act 213 of the Public Acts of Michigan for 1963, as amended by Act 351 of the Public Acts of Michigan for 1972, also known as MCL §129.201 et. seq.

WITNESSED:

_____ _____

_____ _____

_____
Principal

_____

_____

_____

PARKING ACCESS AND REVENUE CONTROL EQUIPMENT
PROJECT - #15-15(PK)

PAYMENT BOND

KNOW ALL MEN BY THESE PRESENTS, that we _____ _____ of the _____ hereinafter called the "Principal" and _____ _____ hereinafter called the "Surety", are held and firmly bound unto those persons known as "Claimants", as defined in MCL §129.206(6) supplying labor or materials to the Principal or his subcontractors and the prosecution of the work provided for in a certain Contract by and between the City of Birmingham and the Principal in the sum of _____ Dollars ($_____), in lawful money of the United States, for the payment whereof, we bid ourselves, our heirs, executors, administrators, successors and assigns, jointly and severally this _____ day of _____, A.D., 20___.

WHEREAS, the above named Principal has entered into a Contract with the CITY OF BIRMINGHAM, MICHIGAN dated the _____ day of _____, A.D., 20____, wherein said principal has covenanted and agreed as follows, to wit:

To furnish all the labor and materials _____ _____

and,

WHEREAS, this Bond is given in compliance with and subject to the provisions of Act No. 123 of the Public Acts of Michigan for 1963, as amended by Act. No. 351 of the Public Acts of Michigan for 1972, also known as MCL §129.201 et seq.

NOW, THEREFORE, the condition of the above obligation is such that if all persons or claimants as defined in Public Act 213 of 1963 supplying labor or materials to the principal contractor or his subcontractors in the prosecution of the work provided for in the contract are paid, the obligation of this Bond shall be void; otherwise, it shall be in full force and effect.

WITNESSED:

_____ _____

_____ _____

_____
Principal

_____

_____

_____
Surety

To: CITY OF BIRMINGHAM
151 MARTIN
P.O. BOX 3001
BIRMINGHAM, MI 48012-3001

Date Submitted: _____

Date Received: _____

REQUEST FOR PARTIAL PAYMENT

Partial Payment Request # ____

The undersigned (the "Contractor") hereby requests payment for work performed on Contract Name _____ and # _____ for the period beginning _____ and ending _____. Attached is an itemized list of completed quantities delivered to date.

During the above period, did Contractor incur additional costs for labor or materials because the bid package was missing important information? _____ (if yes, you must provide details of the additional costs and the missing information).

During the above period, did Contractor incur additional costs for labor or materials because the bid package contained information that was not true? _____ (if yes, you must provide details of the additional costs and the untrue statements).

During the above period, did Contractor incur additional costs for labor or materials because the site conditions were different from what you expected? _____ (if yes, you must provide details of the additional costs and the site conditions, both what you expected and what you encountered).

During the above period, did Contractor incur additional costs for labor or materials because of any reasons not mentioned above? _____ (if yes, you must provide details of the additional costs and the reasons the same were incurred).

The above does not include additional work through work directives issued by the City of Birmingham as described on the attached or as covered by an agreed basis of payment attached. _____.

Contractor hereby certifies, represents and warrants that all suppliers, subcontractors and employees have been paid in full for all materials and labor provided on the job during the above period. Contractor certifies, represents and warrants that there have been no change orders issued or requested during the above period, except for the following:_____
_____.

Contractor certifies, represents and warrants that Contractor will never request payments, other than the request made in this form, for any work performed or materials provided during the above period, except for the following unresolved items: _____
_____.

Attached are the following documents
Further detailing the above.

1. _____

2. _____

3. _____

Contractor:

_____
(Company or Contractor Name)

_____
(Signature of Officer of the Company)

_____
Type or Print Name and Title

CONTRACTOR'S AFFIDAVIT

To: CITY OF BIRMINGHAM
151 MARTIN ST.
P.O. BOX 3001
BIRMINGHAM, MI 48012-3001

Date Submitted_____

Date Received_____

REQUEST FOR FINAL PAYMENT

Payment Request # _____

The undersigned _____
Name of Contractor
hereby represents that on _____ he/she (it) was awarded a contract by
Date
The City of Birmingham hereafter called the Owner to _____, in accordance with the terms and conditions of Contract No. _____, Contract Name _____; and the undersigned further represent that the subject work has now been accomplished and the said contract has now been completed.

The undersigned hereby warrants and certifies that all of his/her (its) indebtedness arising by reason of the said contract has been fully paid or satisfactorily secured; and that all claims from subcontractors and others for labor and material used in accomplishing the said contract, have been fully paid or satisfactorily settled. The undersigned further agrees that if any such claim should hereafter arise, he/she (it) shall assume responsibility for the same immediately upon request to do so by the Owner.

The undersigned, for a valuable consideration, the receipt of which is hereby acknowledged, does further hereby waive, release and relinquish any and all claims or right of lien which the undersigned now has or may hereafter acquire upon the subject premises for labor and material used in accomplishing said project owned by the Owner.

This affidavit is freely and voluntarily given with full knowledge of the facts on this ____ day of _____, 20__.

Company or Contractor Name: _____

Signature of Officer of Company _____

Type or Print Name and Title _____ _____
Name Title

Subscribed and sworn to before me, a Notary Public in and for _____ County, Michigan on this _____ day of _____, 20__.

_____, Notary Public

My commission expires: _____

SWORN STATEMENT

STATE OF MICHIGAN)
) ss:
COUNTY OF OAKLAND)

_____ , being duly sworn, deposes and says that _____ is the Contractor for an improvement to the following described real property situated in the County of Oakland, City of Birmingham, State of Michigan, described as follows:

in accordance with the general requirements of the Contract by and between the CITY OF BIRMINGHAM and _____ the following is a statement of each subcontractor, supplier and laborer for the payment of wages or fringe benefits and withholdings is due but unpaid with whom the (contractor)(subcontractor) has (contracted) (subcontracted) for the performance under the contract with the CITY OF BIRMINGHAM, and that the amounts due to the persons as of the date hereof are correctly and fully set forth opposite their names as follows:

Name of Subcontractor Supplier or Laborer	Type of Improvement Furnished	Total Contract Price	Amount Already Paid	Amount Currently Owing	Amount of Laborer Wages	Amount of Laborer, Fringe Benefits and Withholdings Due but Unpaid
TOTALS						

The contractor has not procured material from, or subcontracted with, any person other than those set forth above, and owes no money for the improvement other than the sums set forth above.

Deponent further says that he or she makes the foregoing statement as the (contractor)(subcontractor) or as _____ of the (contractor)(subcontractor) for the purpose of representing to the CITY OF BIRMINGHAM that the Payment Bond for labor and materials is free from claims for the possibility of claims except as specifically set forth above.

Deponent further says that he or she is a duly authorized representative of the (contractor)(subcontractor) and has been authorized to give this release of all claims against the City arising under or by virtue of _____ contract dated _____ .

_____

Deponent

Subscribed and sworn to before me

this _____ day of _____

20____

_____
Notary Public

_____ County, Michigan

My Commission Expires:

ADVERTISEMENT

CITY OF BIRMINGHAM, MICHIGAN
PARKING ACCESS AND REVENUE CONTROL SYSTEM
- CONTRACT #15-15(PK)

Sealed proposals endorsed "Parking Access and Revenue Control System - Contract #15-15(PK)" will be received from contractors by the City of Birmingham, at the office of the City Clerk, located at 151 Martin Street, Birmingham, Michigan, until **2:00 p.m. local time, on Friday, August 7, 2015**. The proposals will be opened and publicly read aloud at that time. Bids submitted after the exact time specified for receipt will not be considered.

The project will include provision and installation of parking access and revenue control equipmnet in five City owned parking structures including the gates, entrance machines, pay stations, intercoms and cameras. Bidders shall review and comply with all Contract Documents, and supplemental information, as defined in the Instructions For Bidders.

Bidding documents for the project may be obtained through the Michigan Inter-Governmental Trade Network (MITN), which may be accessed online at http://www.govbids.com/scripts/mitn/public/home1.asp. Vendors wishing to obtain copies of the bidding documents will need to register through the MITN website. Bidding documents will be available beginning **at noon on Friday, July 24, 2015**.

No pre-bid meeting will take place. Question from interested bidders will be accepted until noon August 5, 2015 and will be shared with all interested parties at that time. All questions must be sent by e-mail to sp+birmingham@spplus.com by the deadline.

The successful bidder shall be required to post bonds, and to comply with the contract requirements of the City Charter. Bids are firm, and no bid may be withdrawn for a period of sixty (60) days after opening of bids.

Procurement for the City of Birmingham will be handled in a manner providing fair opportunity for all businesses. This will be accomplished without abrogation or sacrifice of quality and as determined to be in the best interest of the City of Birmingham. The City reserves the right to reject any and all bid proposals, to waive any irregularity in any of the bid proposals submitted, and to accept any proposal which it shall deem to be the most favorable to the interest of the City.

A certified check or bid bond in the amount of five percent (5%) of the base bid must accompany each bid proposal.

LAURA BROSKI
CITY CLERK

Published in:
Birmingham Observer & Eccentric Newspaper
MITN

SUPPLEMENTAL INSTRUCTIONS TO BIDDERS

The City of Birmingham operates five automated parking facilities within the Central Business District:

1) Chester Structure 180 Chester Street
2) N. Old Woodward Structure 333 N. Old Woodward
3) Park Structure 333 Park Street
4) Peabody Structure 222 Peabody Street
5) Pierce Structure 333 Pierce Street

MINIMUM SYSTEM SPECIFICATIONS

The ideal PARCS will be an integrated system with all ticket dispensers, card readers, pay stations and gates synchronized and linked together through an operating system located at the parking management office inside the Chester Structure.

The proposed PARCS system must meet the following minimum specifications:

1) New, unused and constructed of material sufficient to prolong life in our varied climate.
2) Barcode/ QR code ticket dispensers and readers
3) Provide new proximity card based monthly access system with 5000 card initial order
4) Fully integrated with Parkmobile payment systems
5) Accept all major credit cards
6) Allow credit card in/out transactions
7) Allow Near Field Transactions (NFT)
8) Credit card readers shall not save card data internally and must include EMV technology. If such technology is not yet available for the system, a price and timeframe to upgrade must be included.
9) Support audit functions by monitoring system operations including and generating required reports for transient, monthly and validated parking by hourly, daily and monthly increments.
10) External illuminated signs that will automatically trigger a “Garage Full” message when certain programmable thresholds have been met.
11) New vehicle detection loops in all lanes.
12) New automatic gates in all lanes.
13) Validation software with on-line and off-line options included.
14) System must be easily expandable in the event new locations are added to the parking system.
15) All customer points of contact must include an intercom with the following specifications:

a) Commend IP Intercom subscriber unit kit and/or IP intercom interface per PARCS manufacturer (ET908 Module with new CATe5 or approved equal)
b) Integrated microphone and loudspeaker
c) GE Tel Card (GE-TEL) or approved equal
d) G3-IP-4B subscriber card and necessary upgrade license(s) of required number of intercoms or approved equal
e) LAN license to connect the GE300 server to RMS (L3-LAN-4)
f) One license should be a level P (i.e. L3-IP-8P)
g) EE311AS 2 wire DSP desktop station with display

16) IP-based camera system. Axis P3363-LVE dome camera or approved equal recommended.
a. Support multiple video streams of both mjpeg and H.264
b. Support ONVIF protocol
c. Digital zoom and remote focus capability
d. Powered over Ethernet cable by a PoE network switch
e. Exterior grade
f. Low Level Light condition
g. Each payment location must have a camera focused on the front of the machine able to view live transactions from a remote location
h. Each exit plaza must have a rear facing camera to show potential traffic back-ups.

PHASING OF THE WORK

Installation will begin at the Chester Structure where an approximately six month test of a cashless/ticketless system will be conducted by the City. After this timeframe, the City will determine the best course of action based on public acceptance and operational ease of the system. As such, all proposals must be valid for such a timeframe as required to complete this test.

Each proposal should include two phases. Phase 1 will include only the Chester Street location with a cashless/ticketless system as noted below. Phase 2 will include the remaining four locations with a cash system and an alternate price if using a cashless/ticketless system (as determined by the City).

It will be the responsibility of every proposal provider to visit each location to compile their information. No modifications or changes to the proposals will be allowed after the due date. Each structure is unique and as such should be quoted with the following specifications:

Chester Street

This location is scheduled to change from its current configuration to the below listed equipment which will be located entirely inside the structure.

- 1 full time entrance with credit/validation/pass only (existing east lane)
- 1 reversible entrance/exit with credit/validation/pass only (existing second from east end lane)

- 2 full time exits with credit /validation/pass only (existing westerly lanes)

PHASE 2 CASH OPTION

North Old Woodward

- 2 full time entrances with ticket dispensers/pass
- 1 full time exit for credit card/validation/pass only
- 1 full time exit with pay in lane for cash/credit/validation/pass

Park

- 2 full time entrances with ticket dispensers
- 1 pay on foot station with cash/credit/validation in SW corner
- 1 pay on foot station with credit/validation only in SW corner
- 1 pay on foot station with credit/validation only in NE corner
- 2 full time exits with credit/validation/pass only

Peabody

- 1 full time entrance with ticket dispenser/pass
- 1 reversible entrance/exit with ticket dispenser/pass entry and credit/validation/pass exit
- 1 pay on foot with credit/validation only in NE corner
- 1 pay on foot with cash/credit/validation in SW corner
- 1 full time exit with credit/validation/pass

Pierce

- 3 full time entrances with ticket dispenser/pass
- 1 pay on foot station with credit/validation only in NW lobby
- 1 pay on foot station with credit/validation only in E lobby
- 2 full time exit with credit validation/pass only
- 1 full time exit with cash/credit/validation/pass

PHASE 2 NO CASH OPTION

North Old Woodward

- 2 full time entrances with credit/validation/pass only
- 2 full time exits with credit/validation/pass only

Park

- 2 full time entrances with credit/validation/pass only
- 2 full time exits with credit/validation/pass only

Peabody

- 1 full time entrance with credit/validation/pass only
- 1 reversible entrance/exit with credit/validation/pass only
- 1 full time exit with credit validation/pass only

Pierce

- 3 full time entrances with credit/validation/pass only
- 3 full time exits with credit/validation/pass only

Following the award of the contract, the Contractor shall submit a written detailed work schedule to the Owner for review, showing the proposed phasing of the project, and anticipated construction progress. The Contractor shall notify the Owner in writing of any changes in the schedule, and submit updated schedules as the construction continues.

TRAINING

Proposal pricing shall include complete training for the City of Birmingham's designated persons for thorough system description, operation and programming after installation is complete. Additional training shall be provided, if needed or as requested at prevailing rates throughout the length of the contract. At a minimum, training shall include:

1. A minimum four hour session for attendants on system use including the normal and abnormal operations that could occur during customer operation.
2. A 2 day session for management team including above operations, report generation and auditing functions.
3. A minimum 1 day session for technician personnel to develop expertise in the maintenance and minor repair of the system proposed including but not limited to maintenance, troubleshooting and repairs, programming, inventory and collections.

AFTER SALES SUPPORT

The successful contractor shall provide 24/7 phone support and shall outline what additional support options are available, such as online knowledge databases

PRICING

Identify, itemize and price every component or subsystem required to perform satisfactorily as a fully functioning system. Any software, hardware, cabling, communications connections, printers, papers, batteries, ribbons, lubricants, adapters or other item required for the proper operation as a working network of machines shall be offered during submittal. Identify and price any components that are recommended as spare or stocking repair parts or supplies to provide timely repairs for broken equipment. Additionally, summarize each location's pricing under Equipment, Software and Installation headings.

AUTHORIZED DEALERS

Identify authorized provider for installation, repairs, service and warranty if different than the bidder.

WARRANTY

Successful contractor shall agree to repair and/or replace any part or modular component determined to be defective in material or workmanship under normal use and service at no additional cost for a minimum period of two (2) years after installation. Warranty shall not begin until the City has given the successful bidder written acceptance. Guaranteed cost of hourly labor for repairs outside warranty issues in years one and two and for all work in years three through five must also be included.

HOURS OF WORK

Typically, work of this nature is allowed six days a week, from 7 AM to 7 PM, Monday through Saturday, excluding major holidays, such as Memorial Day and July 4th.

CONTRACTOR SUPERVISION

The contractor shall have a competent superintendent or foreman available at all times, authorized to act for the contractor as agent on the work, who thoroughly understands the plans and specifications, and who shall receive instructions from the Engineer. The superintendent or foreman shall be responsible for all subcontractors. The superintendent or foreman shall be designated by name prior to commencement of the work, and shall be available ON SITE for proper management of the project for the duration of the contract, regardless of whether or not the contractor or subcontractors are engaged in activity on the project.

The lead installer selected to install the equipment shall be identified at the beginning of the installation and shall have installed a minimum of 5 projects similar to this installation. The lead installer who starts the installation shall not be removed from the job during the project installation unless agreed upon by all parties.

WORK AREA

The contractor for this project shall be alert to the fact that the work areas are very visible to the public, and that his work operations have a direct impact on a large number of people on a daily basis. The work shall be organized to reduce the number of work days on each street to a minimum. Also, the contractor shall keep his work area as clean and dust-free as practical at all times.

The Contractor will be allowed free parking within the parking structure to their staff that is on site working on this project.

SCHEDULE OF VALUES / CONTRACT PRICE BREAKDOWN

The successful bidder shall submit a complete Schedule of Values with their bonds and insurance certificates following the award of the contract. The Schedule of Values shall be used as a basis for determining progress payments on a lump sum contract or any designated lump sum bid item. The Schedule of Values shall be a schedule of cost loaded construction activities equal, in total, to the lump sum bid and shall be in such form and sufficient detail to correctly represent a reasonable apportionment of the lump sum.

Each lump sum bid item listed on the Proposal must be broken down separately. The breakdown of each lump sum bid item must cover the cost of construction required by the Contract Drawings and Contract Documents for that item. The sum of the values for the construction activities, within a bid item, must equal the total bid amount for that item. The breakdown shall include subcontract amounts which shall not deviate from the amounts submitted in the Bid Proposal. The Contractor shall provide certification from the Subcontractors certifying the subcontract amounts.

Each activity in the Schedule of Values shall delineate one construction activity. For example, the removals of the existing PARCS equipment, the construction of an electrical duct bank or installation of equipment in one parking structure. The costing for each activity should include all costs for any labor, materials and equipment required to complete the activity, plus applicable overhead and profit. The Schedule of Values shall include the itemized costs for the startup and testing, and any maintenance services to be performed before the final project acceptance is made. No non-construction activity shall be cost loaded.

The total of the Schedule of Values shall equal the current Contract value at all times. At any time during the progress of the Work of the Contract the Owner reserves the right to review the cost loading of the Schedules of Values and direct necessary revisions. When requested by the Owner, the Contractor shall provide all information necessary to substantiate the cost loading.

SUBCONTRACTORS AND MATERIAL SUPPLIERS

Each bidder shall list all subcontractors and material suppliers he intends to use on the job, in the space provided in the Proposal Form. Any change of subcontractors or material suppliers from the submitted list, or any additions thereto, shall be made only upon written approval of the Owner and/or Owner's representative (ie. SP+). Approval of a subcontractor does not constitute approval of material. The Owner reserves the right to dis-approve any subcontractor and/or material supplier, intended for use on this project.

The Owner and/or the Consultant reserve(s) the right to visit and inspect the local and manufacturing facilities of all control equipment such as gates, pay stations, solid state drives, etc.

MATERIALS AND SUBSTITUTIONS

If materials are specified using names of specific manufacturers, the sole purpose is to establish standards of design, function, and quality, but not to limit competition.

Proposals shall be based on the various materials specified. However, the bidder may, if he desires, submit with his proposal, substitute materials of other manufacturers for similar use providing such substitutes have been given prior approval by the Consultants. Each such substitution shall be listed on his proposal, stating in full: the amount which is to be added to or deducted from Base Proposal in the event the substitution is accepted.

Where the specifications call for any stipulated item or "approved equal", or words to that effect, the proposal shall be based on the specified make or style of material. If the bidder prefers to use any substitute material, he shall so state in his proposal, and set forth the description of the substitute material together with the amount to be added to or deducted from the price set forth in his Base Proposal in the event such substitute material is used. The final selection materials will rest with the Owner and/or the Consultant.

The Owner may award the Contract with or without substitutions. If the Bidder names no substitutes, the materials specified shall be provided.

The Owner or their representative shall make the determination as to whether or not a substitution is considered equal to that specified. Should a conflict exist between two or more items of the specifications, the Bidder shall resolve the issue prior to bid date. Any conflict after bid date shall be interpreted by the Owner or their Consultant and abided to by the Bidder.

CONFORMANCE TO IRAN ECONOMIC SANCTIONS ACT

Pursuant to Michigan law, (the Iran Economic Sanctions Act, 2012 PA 517, MCL 129.311 et seq.), before accepting any bid or proposal, or entering into any contract for goods or services with any prospective Contractor, the Contractor must first certify that it is not an "IRAN LINKED BUSINESS", as defined by law.

Each Contractor submitting a bid on this project shall include a completed copy of the form contained in the Supplemental Information of these specifications with their bid certifying that they have full knowledge of the requirements and possible penalties under the law MCL 129.311 et seq. that the Contractor is NOT an "IRAN LINKED BUSINESS" as required by MCL 129.311 et seq., and as such that Contractor is legally eligible to submit a bid and be considered for a possible contract to supply goods and/or services to the City of Birmingham.

References

Provide the contact information of at least three clients where a similar or more complex system has used the same equipment for a minimum of 2 years. If the system is too new to meet these criteria, provide locations with as much operational time as available. The contract names and numbers should be provided for reference.

REVIEW AND AWARD

To be considered for selection, providers must submit a complete response to this RFP. Failure to submit all information requested may result in the rejection of the incomplete proposal.
Proposals shall be signed by an authorized representative of the provider. One copy of the proposal must be submitted to the designated contact bound in a single volume as practical. All documentation submitted with the proposal also should be bound in the single volume. An electronic pdf format of the proposal must also be included in the bid package.
The following criteria, not necessarily listed in the order of importance, will be used in evaluation the responses to this RFP with weighting as determined in the sole discretion of the City:

1) Total bid price.
2) Technical specifications for equipment to be provided as described in the proposal.
3) Ability of the proposed system and equipment to meet the needs of the City.
4) Upgrade capabilities.
5) Proposed timeframe for installation and training.
6) Cost of system and system upgrades.
7) Warranty provided
8) Follow up support and hourly price for service outside of warranty issues that may be needed for the two year period following installation.

END OF SECTION

SECTION 310
GENERAL INSTRUCTIONS TO BIDDERS

CONTRACT PRICE

Proposals are solicited on the basis of unit prices and/or lump sum prices which are to be clearly set forth in the Proposal Form. The final contract price on the accepted proposal will be determined by multiplying the number, or fraction thereof, units of work actually performed, or labor, material, or appliances actually supplied by the price designated for such items in the proposal. The total bid figure on the proposal form is merely for purposes of estimating and comparing costs, and under no circumstances on unit price contracts does it constitute or imply the total contract price.

FORM OF PROPOSAL

All proposals must be made in the form attached hereto. Additional copies of this proposal form for the bidder's files may be obtained on request at the City Engineering Department. Modifications, additions, subtractions or to the terms of the proposal and contract may disqualify the bidder from consideration in awarding the contract.

All prices stated in the proposals must be plainly written in figures.

All information called for on the proposal must be furnished to enable a fair comparison of the bids.

The place of residence of each bidder, or the official address in the case of a firm or company, with county and state, must be given with the signature.

Each proposal must be enclosed in a sealed envelope addressed to the City Clerk of the City of Birmingham, and endorsed upon the outside with the name of the project, as it appears in the advertisement for bids.

CONFORMITY TO PLANS AND SPECIFICATIONS

Proposals must be made in full conformity to all the conditions, as set forth in the plans and specifications for the work now on file in the office of the City Engineer.

AGENCY

Anyone signing a proposal as agent of another or others, must submit with the proposal, legal evidence of his authority to do so.

LEGAL STATUS OF BIDDER

The legal status of the bidder, that is, as a corporation, a partnership or an individual, must be stated in the proposal. A corporation bidder must name the state in which its articles of incorporation are held, and must give title of the official having authority under the bylaws to sign contracts. A partnership bidder must give the full names and addresses of all partners.

The bidder shall be regularly engaged in the business of installing and servicing equipment of the type and character required by these Specifications. Furthermore, the local service facility must be owned and operated by the Contractor (Bidder), and shall consist of management, field supervision, and residing local journeymen.

CERTIFIED CHECK, BIDDER'S BOND OR BANK DRAFT

Each proposal must be accompanied by a certified check, bidder's bond or bank draft in an amount not less than five (5) percent of the total price, drawn to the order of the City of Birmingham, as a guarantee of good faith on the part of the bidder and subject to the conditions stipulated in the proposal form.

No proposal shall be withdrawn for a period of sixty (60) days after the date set for the opening of bids.

A single check, bond or draft may serve to cover two (2) or more alternative proposals when such alternative proposals are submitted by the same bidder.

The bid deposit of all except the three (3) lowest bidders will be returned within three (3) weeks after the opening of bids. The bid deposit of the three (3) lowest bidders will be returned within two (2) weeks after the contract has been executed by both parties.

OBLIGATION TO EXECUTE CONTRACT

The bidder whose proposal is accepted will be required to execute the contract, and to furnish sureties hereafter specified, within twenty-one (21) days after receiving notice of such acceptance; and in case of his refusal or failure to do so, he shall be considered to have abandoned all his rights and interest in the award, and his bid deposit may be declared to be forfeited to the City, as liquidated damages and not a penalty, and the contract may be awarded to another.

BONDS

The successful bidder will be required to furnish two (2) bonds, each on the forms provided as follows:

> A Performance Bond in an amount not less than 100% of the contract price in favor of the City of Birmingham, conditioned upon the faithful performance of the contract, and completion on or before the date specified.

A Payment Bond for labor or material running to the claimants, which is defined in MCL §129.206 as those persons supplying labor or materials to the principal contractor or subcontractors in the prosecution of the work provided for in this contract in an amount not less than 100% of the contract price for the protection of those persons supplying labor, materials or both.

The cost of all bond premiums is incidental to the other work on this project and shall be included in the Contractor's bid price(s) for the work. No additional or separate payment shall be made from the City for providing the required bonds.

INDEMNITY

The Contractor shall indemnify the City of Birmingham in accordance with the INDEMNITY section set forth in the General Requirements.

INSURANCE

The Contractor shall not commence work under this contract until he has obtained the insurance required under this paragraph. All coverages shall be with insurance companies licensed and admitted to do business in the State of Michigan. All coverages shall be with insurance carriers acceptable to the City of Birmingham. The costs of all insurance premiums are incidental to the other work on this project and shall be included in the Contractor's bid price(s) for the work. No additional or separate payment shall be made from the City for providing the required insurance coverages.

1. Workers' Compensation Insurance: The Contractor shall procure and maintain during the life of this contract, Workers' Compensation Insurance, including Employers Liability Coverage, in accordance with all applicable statutes of the State of Michigan.

2. Commercial General Liability Insurance: The Contractor shall procure and maintain during the life of this contract, Commercial General Liability Insurance on an "Occurrence Basis" with limits of liability not less than **$3,000,000** per occurrence combined single limit, Personal Injury, Bodily Injury and Property Damage. Coverage shall include the following extensions: (A) Contractual Liability; (B) Products and Completed Operations; (C) Independent Contractors Coverage; (D) Broad Form General Liability Extensions or equivalent; (E) Deletion of all Explosion, Collapse and Underground (XCU) Exclusions, if applicable.

3. Motor Vehicle Liability: The Contractor shall procure and maintain during the life of this contract Motor Vehicle Liability Insurance, including all applicable no-fault coverages, with limits of liability of not less than **$3,000,000** per occurrence combined single limit Bodily Injury and Property Damage. Coverage shall include all owned vehicles, all non-owned vehicles, and all hired vehicles.

4. Additional Insured: Commercial General Liability and Motor Vehicle Liability Insurance, as described above, shall include an endorsement starting the following shall be *Additional Insureds*. The City of Birmingham, including all elected and appointed officials, all employees and volunteers, all boards, commissions and/or authorities and board members, including employees and volunteers thereof. This coverage shall be primary to any coverage that may be available to the additional insured, whether any other available coverage be primary, contributing or excess.

5. Pollution Liability Insurance: CONTRACTOR shall procure and maintain during the life of this Agreement Pollution Liability Insurance, with limits of liability of not less than $1,000,000, per occurrence preferred, but claims made accepted.

6. Cancellation Notice: Workers' Compensation Insurance, Commercial General Liability Insurance and Motor Vehicle Liability Insurance, as described above, shall include an endorsement stating the following: "Thirty (30) days Advance Written Notice of Cancellation or Non-Renewal shall be sent to the Finance Department, City of Birmingham, P.O. Box 3001, 151 Martin Street, Birmingham, Michigan 48012.

7. Owners Contractors Protective Liability: The Contractor shall procure and maintain during the life of this contract, an Owners Contractors Protective Liability Policy with limits of liability not less than **$3,000,000** per occurrence, combined single limit, Personal Injury, Bodily Injury and Property Damage. The City of Birmingham shall be "Name Insured" on said coverage. Thirty (30) days Notice of Cancellation shall apply to this policy.

8. Proof of Insurance Coverage: The Contractor shall provide the City of Birmingham at the time the contracts are returned for execution, Certificates of Insurance and/or policies, acceptable to the City of Birmingham, as listed below:

    a. Two (2) copies of Certificate of Insurance for Workers' Compensation;

    b. Two (2) copies of Certificate of Insurance for Commercial General Liability;

    c. Two (2) copies of Certificate of Insurance for Vehicle Liability Insurance;

    d. Original policy, or original binder pending issuance of policy, for Owners Contractors Protective Liability Insurance;

    e. If so requested, Certified Copies of all policies mentioned above will be furnished.

8. Coverage Expiration: If any of the above coverages expire during the term of this contract, the Contractor shall deliver renewal certificates and/or policies to the City of Birmingham at least ten (10) days prior to the expiration date.

9. Maintaining Insurance: The CONTRACTOR also agrees to provide all insurance coverage as specified. Upon failure of the CONTRACTOR to obtain or maintain such insurance

coverage for the term of the agreement, the City of Birmingham may, at its option, purchase such coverage from the contract amount. In obtaining such coverage, the City of Birmingham shall have no obligation to procure the most cost-effective coverage but may contract with any insurer for such coverage.

EXAMINATION OF SITE

It is expected that each bidder will make a personal examination of the entire site of the proposed work, and of its surroundings. It will be assumed that each bidder, before offering their proposal, has obtained first hand information concerning any probable interference and the available facilities for transporting, handling and storing of construction equipment and materials, and concerning other conditions which may affect their work.

BIDDER'S RESPONSIBILITY FOR CONDITIONS OF WORK AT SITE

Each bidder shall inspect the site of the work and inform them self of the conditions under which the work is to be performed, any obstacles which may be encountered and all other relevant matters concerning the work to be performed. The successful bidder, if awarded the Contract, shall not be allowed any extra compensation, by reason, for any matter or thing, because of their failure to have so informed themselves prior to the bidding. The bidder's failure to inspect the site, specifications and/or otherwise inform themselves of all conditions under which the work is to be performed, will not relieve them in any way of the responsibility of furnishing material or work necessary to complete the project at no additional cost to the Owner.

Before submitting his Proposal for this work, each bidder must thoroughly acquaint themself with all of the conditions called for in the Specifications. Bidder must know in advance and convey to the Consultant and Owner of any likely interference with work they expect with their own forces or additional expense that they may incur due to the operations of other contractors. There will be no additional compensation paid "later" because of alleged extra expense due to the improper performance of "work by others" without pre-bid documentation.

Dimensions and information indicated, specified or given orally concerning existing obstructions on or near the site; sizes, elevators, and location of services, walks, curbs, pavements and rail facilities; boring data, etc., have been obtained from sources the Consultant or Owner believes to be reliable but they do not warrant the accuracy of same. Such information is given solely for the convenience of the bidder and use of such dimensions, elevators, sizes, or information is made at each bidder's own risk.

LEGAL CONDITIONS

Bidders are notified that they should acquaint themselves with the various provisions in the laws of the State of Michigan, and in the ordinances and regulations of the City of Birmingham and Oakland County, with respect to the carrying on of public improvements.

BIDDER'S ABILITY

It is the intention of the City to award the contract for this job to a contractor whose construction skill and financial resources are fully equal to the task of prosecuting the work in a satisfactory manner, and of bringing it to completion within the time limit specified. With this end in view, the Form of Proposal calls for at least three (3) references concerning his ability to do this particular class of work, and a reference list of the last five (5) projects, including those not completed or currently being performed. The mere ability to offer bonds will not be taken as sufficient evidence of responsibility on the part of the bidder. If the contract is awarded to a foreign company, a certificate of authority to do business in this state must accompany executed contract.

PAYMENTS

Partial payments will be made monthly to the Contractor during the satisfactory progress of the working accordance with the Payments section of the General Requirements.

RIGHT TO ACCEPT, REJECT AND TO WAIVE DEFECTS

The City reserves the right to accept any proposal, to reject any or all proposals, and to waive any defect or irregularity in any proposal, if it appears advantageous to the City to do so.

In particular, any alterations, erasure or interlineation in the Specifications which are made a part, specifically, of these instruments, or of the Form of Proposal, shall render the accompanying proposal irregular and subject to rejection by the City. In case any explanation, additions or alterations are to be offered, they shall be indicated on separate sheets attached to the proposal form and referred to therein.

Proposals which are clearly unbalanced, will also be considered as irregular, and will be subject to instant rejection by the City.

INTERPRETATION OF DOCUMENTS AND BULLETING

Any explanation desired by bidders must be requested of the Owner in writing or by email. If explanation is necessary, a reply will be made in the form of an addendum, a copy of which will be forwarded to each bidder who has received a set of the bidding documents.

Neither the Owner/Owner's representative, nor the Consultant will give oral answers to any inquiries regarding the meaning of Specifications, or oral instructions previous to the award of the Contract. Any oral statement regarding same by any persons, previous to the award, shall be un-authoritative.

All addenda issued prior to date of receipt of proposals shall become a part of the Contract Document and all proposals are to include the work therein described. Each proposal submitted shall list all addenda which have been received prior to the time scheduled for receipt of proposals.

GENERAL REQUIREMENTS

DEFINITION OF TERMS

The intent and meaning of words and expressions, or pronouns used in their stead, occurring in these specifications or in other contract documents, shall be interpreted as described under Section 101.03 Definitions of Terms of the Current Standard Specifications for Highway Construction adopted by the Michigan Department of State Highways and Transportation, with the following additions or exceptions.

City - The corporation of the City of Birmingham, Michigan

Commission - The Commission of the City of Birmingham, Michigan, and any other board, body, official or officials to which or to whom the powers belonging to the said Commission shall, by virtue of any act or acts, hereafter passed or be held to appertain.

Engineer - The person holding the position or acting in the capacity of City Engineer of the City of Birmingham, Michigan, acting either directly or through his properly authorized agents, such agents acting within the scope of the particular duties entrusted to them.

Directed, required, permitted, etc. - Whenever in the specifications the words "as directed", "as required", "as permitted", or words of like effect are used, it shall be understood that the direction, requirements or permission of the Engineer is intended; similarly the words "approved", "acceptable", "satisfactory", or words of like import shall mean approved by, or acceptable, or satisfactory to the Engineer.

INTENT OF THE PLANS, SPECIFICATIONS AND CONTRACT

The intent of the plans, specifications and contract is to provide for the completion of the work in substantial compliance with the details as shown thereon, and as described herein. The Contractor shall furnish all labor, materials, equipment, tools, transportation and necessary supplies, and shall perform all operations required to complete the work in accordance with the specifications, and the lines, grades and cross sections provided for on the plans, or by authorization.

EXTRA WORK

No extra work shall be started, or extra material furnished, until such extra work or furnishing of extra material is authorized in writing by the Engineer.

The price for such extra work or material must be approved by the Engineer. Said price may be a unit price, a lump sum price, or if the Engineer so elects, the work shall be done on a force account basis, which will be paid for in the following manner:

For all labor, teams and foremen in direct charge of the specific work, the Contractor shall receive the actual rate of wage paid for each and every hour that said labor, teams and foremen are actually engaged in such work, plus 20% of the sum thereof.

For materials and supplies, the Contractor will receive the actual cost of such materials delivered on the work, including freight charges, as shown by original receipted bills, plus 15% of the sum thereof.

For any machinery and equipment owned or rented by the Contractor, which it may be deemed necessary or desirable to use on extra work, the Contractor will be paid at the actual charge-out rate, if reasonable, for his own equipment, or at the actual rental price paid, if reasonable, for rented equipment for each and every hour that such equipment is used on the work, to which sum 15% will be added.

Bond premium, workmen's compensation insurance, personal injury public liability and property damage public liability insurance, unemployment compensation, and Federal Social Security will be paid for at actual cost, to which sum 15% will be added. The Contractor shall furnish satisfactory evidence of the rate or rates paid for such insurance.

The compensation as herein provided shall be accepted by the Contractor as payment in full for extra work done by force account, and the said percentages shall cover profit, superintendence, general expense, overhead, and the use of small tools and equipment for which no rental is allowed.

ALTERATION IN CHARACTER OF WORK

Should the Contractor encounter, or the Engineer encounter, during the progress of the work, sub-surface and/or latent conditions at the site materially differing from those shown on the plans or indicated in the specifications, the Engineer's attention shall be called immediately to such conditions before they are disturbed. The Engineer shall thereupon investigate the conditions, and if he finds that they materially differ from those shown on the plans and indicated in the specifications, he shall at once make such changes in the plans and/or specifications, as he may find necessary.

COORDINATION OF SPECIFICATIONS AND PLANS

In case of discrepancy, written figures shall govern over numerals, figured dimensions shall govern over scaled dimensions, plans shall govern over standards specifications, supplemental specifications shall govern over standard specifications and plans, and special provisions shall govern over supplemental specifications.

The Contractor shall not take advantage of any apparent error or omission in the plans or specifications, but the Engineer shall be permitted to make such corrections and interpretations as may be deemed necessary for the fulfillment of the intent of the plans and specifications.

AUTHORITY OF ENGINEER

The Engineer shall decide all questions which may arise as to the quality and acceptability of materials furnished and work performed, and as to the manner of performance and rate of progress of the work; all questions which may arise as to the interpretation of the plans and specifications; and all questions as to the satisfactory and acceptable fulfillment of the terms of the contract by the Contractor.

INSPECTION

Inspectors may be appointed and directed to inspect all materials used, and all work done. The inspection may extend to all parts of the work, and to the preparation or manufacture of the materials for use in the work. The Inspectors will not be authorized to revoke, alter, enlarge or relax any of the provisions of these specifications, nor to change the plans in particular. The Inspector on the work will inform the Engineer as to the progress of the work, the manner in which it is being done, and the quality of the materials being used. He will also call to the attention of the Contractor any failure to follow the plans and specifications that he may observe. In case of any dispute arising between the Contractor and the Inspector as to the materials furnished, or the manner of performing the work, the Inspector shall have the authority to reject materials or suspend the work until the question at issue can be referred to and be decided by the Engineer. In no instance shall any action or omission on the part of the Inspector relieve the Contractor of the responsibility of completing the work in accordance with the plans and specifications.

The Engineer and his duly authorized Inspector, shall at all times have the right to enter the premises upon which the work under this contract is being done, and to inspect said work and to ascertain whether or not the construction is carried out in accordance with the terms of the contract or specifications; and the Contractor shall render all necessary assistance and provide all reasonable facilities and give ample time for such inspection.

SUPERVISION

The Contractor shall give his personal supervision to the faithful prosecution of the work. In case of his absence, he shall have a competent superintendent or foreman on the work site who shall follow, without delay, all instructions of the Engineer or his assistants in the prosecution and completion of the work, and every part thereof in conformity with this contract. He shall also have full authority to supply material and labor immediately.

The Contractor’s supervisor shall be responsible to act on behalf of the Contractor. This includes being present or available at all times, making decisions on behalf of the Contractor and Subcontractor, scheduling, monitoring work progress on a continued basis, communicating with

City representatives, etc. His name shall be submitted prior to the start of work, with all appropriate ways of contacting him. He shall remain the responsible Contractor's representative throughout completion of the project, including any subcontract work associated with this contract. If it is necessary to replace this person, it shall have the approval of the Engineer.

TIME AND SEQUENCE OF WORK

The Contractor shall have control over the sequence of order of execution of the several parts of the work to be done under this contract, and over the methods of accomplishing the required results, except as some particular sequence or method may be distinctly demanded by these specifications and plans, or by the express provisions of the contract.

The Engineer may, however, make such reasonable requirements as may in his judgment be necessary for the proper and effective protection of work partially or wholly completed, and to these requirements the Contractor shall strictly conform.

The Contractor shall submit a written work plan prior to starting construction. This shall include a written schedule, critical path or equal, to focus in on the date required for completion. This schedule must be updated periodically (not to exceed two (2) weeks) if it becomes necessary to modify the plan. This does not relieve the Contractor of the responsibility to complete the contract according to contractual stipulations. Any modification to the time schedule must obtain prior written approval from the Engineer.

Once the Contractor has mobilized, the Contractor must execute the contract in a continuous, expeditious manner, and may not suspend prosecution of work without written permission of the Engineer.

RELATION TO OTHER CONTRACTORS

The Contractor shall so conduct his operations as not to interfere with or injure the work of other Contractors employed by the City on adjoining or related work, and he shall promptly make good any injury or damage which may be done to such work by him.

Should a contract for adjoining work be awarded to another Contractor, and should the work on one of these contracts interfere with that of the other, the Engineer shall decide which Contractor shall cease work for the time being, and which shall continue, or whether the work of both contracts shall continue at the same time and in what manner. In case territory of one contract should be the necessary means of access to another contract, the Engineer shall have power to grant reasonable privileges with respect to the transportation or movement of men, equipment or materials, as he may adjudge to be necessary or expedient, and in the best interest of the City. Any decision which the Engineer may make as to method and time of conducting work or the use of the territory shall not be made the basis of any claim for damage, but an extension of time may be claimed if justified by the circumstances, the same as in the case of other delays caused by the acts of the City. Any difference of opinion or conflict of interest which may arise between the

Contractor and other Contractors or workmen of the City in regard to adjoining work, shall be determined and adjusted by the Engineer.

CONSTRUCTION STAKES

The location, alignment, elevation and grade of the work will be determined by the Engineer, who will set such stakes as are necessary to properly mark these elements. The Contractor shall assume full responsibility for detail dimensions and elevations measured from the lines, grades and elevations so established.

The Engineer may require the Contractor, at the Contractor's expense, to provide such masts, scaffolds, batterboards, straightedges, templates or other devices as may be necessary to facilitate laying out, inspecting and constructing the work.

The Contractor shall exercise proper care in the preservation of all stakes set for his use, or for the use of the Engineer, and if such stakes are injured, lost or removed by the Contractor's operations, the cost of resetting may be charged to the Contractor. The Department will be responsible for the accuracy of lines, slopes and grades established by the City, except that the Contractor shall not take advantage of any obvious errors or omissions.

SOIL CONDITIONS

The Contractor shall make his own determination of the soil conditions and he shall complete the work in whatever materials, and under whatever conditions he may encounter or create, without extra cost of the City.

MATERIALS FURNISHED BY THE CITY

When specified, the City of Birmingham may furnish materials at no cost to the Contractor. All other materials necessary to complete the project shall be furnished by the Contractor.

Materials to be furnished by the City will be at the Department of Public Works Yard at Eton Road and Holland Avenue. The Department of Public Works will require the Contractor to provide a written authorization from the Engineer before releasing any materials. The Contractor shall load and transport all such materials from the Department of Public Works Yard to the construction site, at his own expense.

The City may, at its discretion, furnish to the Contractor, any materials, supplies or transportation required for extra work, and the Contractor shall not be entitled to any allowance or percentage on account of materials, supplies or transportation so furnished.

STORED MATERIAL

Materials and equipment distributed, stored or placed upon or near the site of the work shall be at all times so disposed as not to interfere with work being prosecuted by the City, or by other

Contractors in the City employ, or with street drainage, fire hydrants, or with access thereto, and not to hinder any more than may be necessary the ordinary pedestrian or vehicular traffic of the streets. Such material shall be stored in such a manner as to facilitate inspection.

REJECTED MATERIAL

If any materials used in the work, brought upon the ground, or selected for use in the work shall be condemned by the Engineer on account of bad or improper workmanship, or as being unsuitable or not in conformity with the specifications, the Contractor shall forthwith remove from the work or its vicinity, without delay, all such rejected or condemned material of whatever kind. Upon failure to do so within forty-eight (48) hours after having been so directed by the Engineer, the condemned material may be removed by the City and the cost of said removal deducted from any money that is then due, or that may thereafter become due to the Contractor. No payment shall be made until such materials, work or workmanship has been removed and proper materials and workmanship substituted therefor.

WATER SUPPLY

Water for construction purposes may be taken from the City mains, at no charge, subject to the rules of the City Water Department. Special approval of the Engineer must be obtained prior to the opening of any fire hydrant.

The Contractor shall provide for his employees an adequate supply of drinking water taken from the City mains.

SANITARY REGULATIONS

Necessary convenience, properly secluded from public observation, shall be constructed where needed for the use of laborers on the work. Such conveniences shall be located, constructed and maintained, subject to the approval of the Engineer and the collections therein shall be removed at such times, and to such places as he shall direct. The Contractor shall obey and enforce such sanitary regulations as may be prescribed by the County Health Department.

PERMITS AND LICENSES

The Contractor shall procure all permits and licenses and pay all charges and fees necessary and incident to the due and lawful prosecution of the work. Unless otherwise stated in these contract documents, there will be no charge for any permits required by the City of Birmingham.

LAWS AND ORDINANCES

The Contractor shall keep himself fully informed of all local ordinances and regulations, state and national laws in any manner affecting the work herein specified. He shall at all times observe and comply with, and shall cause all his agents and employees to observe and comply with, said ordinances, laws and regulations, and shall protect and indemnify the City and its duly

authorized officers and agents against any claim or liability arising from or based on the violation of any such laws, ordinances, regulations, etc.

The Contractor shall obey and abide by all the laws of the State of Michigan and of the Federal Government relating to the employment of labor on public work and all Charter provisions and ordinances of the City of Birmingham regulating or in respect to public improvements.

The Contractor and his Subcontractors shall not discriminate against any employee or applicant for employment, to be employed in the performance of this contract, with respect to hire, tenure, terms, conditions or privileges of employment, because of sex, race, color, religion, national origin or ancestry. Breach of this covenant may be regarded as a material breach of the contract.

PROPERTY AND SURVEY MONUMENTS

Before any monuments or stakes marking the boundaries of property along or near the work are removed or disturbed, the Contractor shall notify the Engineer in sufficient time so that they can be properly located and reset.

All precautions shall be taken to avoid disturbance of permanent survey monuments of any City, County or State authority, and when any of these are disturbed or destroyed, the Contractor shall restore them to the satisfaction of such authority and shall pay all costs incurred by such authority in connection therewith.

BUILDING AND OTHER STRUCTURES ENCOUNTERED

Full responsibility shall be assumed by the Contractor for the protection of all buildings and other structures, public or private, including tracks, pavements, driveways, curbs, poles, signs, hydrants, underground pipes and conduits and other structures of every sort that may be encountered in or adjacent to the work.

Wherever settlement or lateral movement of structures might occur, adequate underpinning or other means of support shall be installed. Where necessary, such support shall be installed in advance of construction.

PROTECTION TO TREES AND SHRUBBERY

The Contractor shall take all prudent and feasible measures that will reduce or eliminate the impacts of development and construction on City owned trees. Trees or shrubbery shall be surrounded by protective cushioning, posts or fencing before construction work begins, if, in the judgment of the Staff Arborist, such precautions are necessary. Further detailed information is included in the supplemental specifications section of the contract if applicable.

DUST CONTROL

All Contractors working on projects that require removal of the paved surface during construction shall provide dust control as directed by the Engineer, at no additional cost to the City. When weather conditions are such that dusty conditions can be created, the Contractor shall be prepared to take action. When dry conditions are declared by the Engineer, the Contractor shall have a water truck and calcium chloride on site at all times, to be applied as needed. The Contractor shall be pro-active with respect to applying dust control measures as needed.

PROTECTION AND RESTORATION OF PROPERTY

The Contractor shall restore, at his own expense, any and all public or private property damaged or injured in consequences of any act or omission on his part, or on the part of his employees or agents, to a condition similar and equal to that existing before such damage or injury was done. If the Contractor neglects to repair or make restoration, the Engineer may, after forty-eight (48) hours written notice to the Contractor, proceed to make such repairs or restoration, and will deduct the cost thereof from any monies that are or may become due the Contractor.

RESPONSIBILITY FOR DAMAGE TO WORK

The Contractor shall protect his work and materials from damage, due to the nature of the work, the action of the elements, the carelessness of other contractors, or from any cause whatever, until the completion and acceptance of the work. Should any damage occur, he shall repair or replace it at his own expense, and complete the work to the satisfaction of the Engineer.

INDEMNITY

To the fullest extent permitted by law, the CONTRACTOR and any entity or person for whom the CONTRACTOR is legally liable, agrees to be responsible for any liability, defend, pay on behalf of, indemnify, and hold harmless the CITY OF BIRMINGHAM, its elected and appointed officials, employees and volunteers and any others working on behalf of the CITY OF BIRMINGHAM against, any and all claims demands, suites, or loss, including all costs and reasonable attorney fees connected therewith, and for any damages which may be asserted, claimed or recovered against or from and the CITY OF BIRMINGHAM, its elected and appointed officials, employees, volunteers or others working on behalf of the CITY OF BIRMINGHAM, by reason of personal injury, including bodily injury and death and/or property damage, including loss of use thereof, which arises out of or is in any way connected or associated with this Agreement. Such responsibility shall not be construed as liability for damage caused by or resulting from the sole act or omission of its elected or appointed officials, employees, volunteers or other working on behalf of the CITY OF BIRMINGHAM.

INSURANCE

The Contractor shall comply with the INSURANCE requirements set forth in the General Instructions to Bidders.

PUBLIC TRAVEL

The Contractor shall at no additional compensation make suitable and adequate provisions, unless otherwise authorized by the Engineer, for the safe and free passage of persons and vehicles by, over or under the work while it is in progress.

The Contractor shall obtain permission from the Engineering Department to close or block any street. The Contractor shall notify the Engineering Department at least four (4) hours before closing or blocking any street.

PUBLIC SAFETY

The Contractor shall furnish, erect and maintain a good and sufficient fence, railing or barrier around all exposed portions of his work, to effectively prevent any accident in consequences of his operations and to protect the work. Such fences, railings and barriers shall be illuminated from sunset to sunrise by suitable and sufficient lights, flares or torches, in such a manner as to make them clearly visible to approaching pedestrians and/or traffic.

When equipment and materials are located within the construction site, or within any public right-of-way, the public shall be safe-guarded by suitable and sufficient signs, lights, barricades or other means furnished and maintained by the Contractor.

If any portion of the work is not properly barricaded, signed or lighted by one-half (1/2) hour after sunset, the necessary barricades, signs and lights may be placed by the City and all costs to the City for such work will be charged to the Contractor. The furnishing, erection and maintenance of barricades, signs and lights by the City will not relieve the Contractor of his responsibility for the protection of traffic and the work.

The Contractor shall provide such traffic regulators and watchmen as are necessary to insure safe and convenient travel by the public and to protect the work.

Barricades, signs and lights shall be erected in accordance with the provisions of the Michigan Manual of Uniform Traffic Control Devices.

MAINTAINING SERVICE TO DRAIN, WATER MAINS, ETC.

The Contractor shall maintain in continuous and effective service all drains, sewers, watercourses and water mains touched during the progress of the work. If it should become necessary to temporarily divert or obstruct the flow of any watercourse or drain, written consent must first be obtained from the Engineer, and then the Contractor shall assume full responsibility for the consequences.

NOTIFICATION OF UTILITIES

The Contractor shall notify all utilities of his intention to excavate or otherwise cause any underground disturbance, by calling MISS DIG at least three (3) full working days before commencing such excavating or disturbances.

The rights are reserved to both the City and to the owners of public utilities or franchises to enter upon the work for the purpose of making repairs to their installations and making changes in their installations necessitated by the work.

SUBLETTING OR ASSIGNING

The Contractor shall perform without subletting, at least twenty-five (25) percent of the work provided for in this contract, computed on the basis of cost.

The subletting of any portion of the contract work shall be subject to approval by the Engineer, but such approval shall not relieve the Contractor of responsibility for the work of such Subcontractors who likewise shall be bound by all pertinent provisions of these specifications. Before any work is sublet, the Contractor shall satisfy the Engineer that the proposed Subcontractor is suitably equipped and experienced in that kind of work, and that he has proper financial resources to enable him to carry it out.

No assignment by the Contractor of any principal construction contract or any part thereof, or of the funds to be received thereunder by the Contractor will be recognized unless such assignment has had the approval of the Engineer, and the Surety has been given due notice of such assignment in writing.

No assignment will receive approval unless the instrument of assignment contains a clause to the effect that it is agreed that the funds to be paid the assignee under the assignment are subject to a prior lien for services rendered or materials supplied for the performance of the work called for in said contract in favor of all persons, firms or corporations rendering such services or supplying such materials.

DISCHARGE OF EMPLOYEES

The Contractor shall employ only competent, skillful persons to do the work. Whenever the Engineer shall notify the Contractor in writing that, in his opinion, any employee on the work is incompetent, impertinent, disobedient, unfaithful, disorderly or otherwise unsatisfactory, that employee shall be discharged from the work and shall not again be employed on it except with the written consent of the Engineer.

PROSECUTION OF WORK

The Contractor shall begin work in accordance with the detailed progress schedule after execution of the Contract by the City. He shall prosecute the work in the order given in the

progress schedule, with force and equipment adequate to complete the major items, portions, or sections within the time limit therein fixed for completion. In case of failure to proceed with the work as rapidly as is provided in the progress schedule, or if it appears at any time that such work is not being prosecuted in such manner as to insure its completion within the time specified, the Engineer shall have the right to require the Contractor to furnish and place in operation such additional force and equipment as the Engineer shall deem necessary to bring the work up to the progress schedule; with or without notice to the Surety, place such working force and equipment on the work and charge the Contractor the cost of the labor and such rental and depreciation rates for the plant and equipment as in his judgment is reasonable, and for such time as the plant and equipment are in service.

EXTENSION OF TIME

If the Contractor is obstructed or delayed in the prosecution or completion of the work by reason of the neglect, delay or default of any other Contractor having a contract with the City for adjoining or contiguous work; by reason of any damage that may happen thereto by the unusual action of the elements; by reason of the abandonment of the work by the employees in a general strike; the part of the City in doing work or furnishing material, the

Contractor shall have no claim of damages for any such cause or delay. He shall, however, be entitled to such extension of the time specified for the completion of the work as the Engineer shall determine to be just and proper, provided however, that such claim for such extension of time is made by the Contractor in writing to the Engineer within one (1) week from the time when any such cause for delay occurs.

SUNDAY AND HOLIDAY WORK

No work shall be done on Sundays, or upon any days celebrated as holidays by the City of Birmingham, except in case of emergency, or to protect work from damage or injury. All Sunday or holiday work must have prior written approval of the Engineer.

NIGHT WORK

No work shall be carried on from 7:00 p.m. to 7:00 a.m., except in case of emergency, or to protect from damage or injury work that has already been done. All night work must have the prior written approval of the Engineer. This provision does not apply to work covered under the provision entitled “shutting off water”.

MEASUREMENT OF QUANTITIES

Quantities of work completed under the contract will be measured by the Engineer according to United States standard measures. When material is measured by weight in tons, the unit shall be the ton of two thousand (2000) pounds.

All longitudinal measurements for area of base courses, surface courses and pavements will be made along the actual surface of the roadway. For all transverse measurements for area of base courses, surface courses and pavement, the dimensions used in calculating the pay area shall be the neat dimensions provided in the plans or by authorization.

Structures will be measured according to neat lines provided on the plans or by authorization.

All materials which are specified for measurement by the cubic yard "Loose Measure" will be measured at the location where used on the project under construction, unless otherwise provided.

CLEANING UP

Upon completion of the actual work of construction, the Contractor shall clean up and leave in a neat condition all the premises which he has occupied during the construction period.

Before the time of the final estimate, the Contractor shall remove from the premises, debris, rubbish and all unused materials, together with all tools and equipment, or shall deposit them at such points and in such a manner as the Engineer may require.

Before leaving the grounds, the Contractor shall replace and put in good repair all fences, telephone poles and lines, roadways and other property that may have been damaged by him in the progress of the work.

UNNOTICED DEFECTS

Any defective work or material that may be discovered by the Engineer before the final acceptance of the work, or before final payment has been made, shall be removed and replaced by work and material which conform to the specifications. Failure to neglect on the part of the Engineer to condemn or reject bad or inferior work or materials shall not be construed to imply acceptance of such work or materials.

FINAL INSPECTION

As soon as practicable, after the completion of all the work covered by the Contract, the Engineer shall make the final inspection of the work. If the work is found to comply with all the terms of the Contract plans and specifications, the Engineer shall accept the completed work with reasonable promptness. If the work is not acceptable to the Engineer at the time of such inspection, he shall advise the Contractor as to the particular defects to be remedied before final acceptance.

If within a period of ten (10) days after such notification the Contractor has not take steps to speedily complete the work as outlined by the Engineer, the Engineer may, without further notice to the Contractor and without in any way impairing the Contractor, make such arrangements as he may deem necessary to have the work completed in a satisfactory manner. The cost of so

completing the work may be deducted from any monies due, or which may become due the Contractor.

Use by the City or public of all or any part of the work before acceptance shall not be construed as acceptance of the part used.

PAYMENTS

Partial payments will be made monthly on the basis of the value of work completed during the estimated period, less the percentages retained as specified herein, provided the work is progressing in accordance with the progress schedule, provided the contract provisions are being fulfilled, and provided the time of completion has not elapsed.

The Contractor shall be responsible to submit requests for partial payments in writing by completing the Request for Partial Payment form supplied in the contract and/or by the City with the attached appropriate quantities as measured or estimated by the Superintendent. Final payment shall be made by an officer of the company submitting

final quantities to the Engineer based upon the value of the work performed and materials completed in accordance with the contract. Prior to final payment, and as a condition thereto, the Contractor shall furnish the City with a duly executed, notarized, “Contractor’s Affidavit”, stating that all bills and claims have been satisfied, except as stated therein, and a release of all claims against the City arising under and by virtue of this Contract.

If the Contractor fails to submit a request for a payment, as specified, the Engineer may at his (her) discretion prepare a Contractor’s Estimate for such payment.

When submitting a request for partial or final payment, the Contractor shall complete the appropriate forms as included in Section 140 of the Contract. When requesting a partial payment, the Contractor shall submit the “Request for Partial Payment” form and the “Sworn Statement” form. When requesting final payment, the Contractor shall complete the “Request for Final Payment” form and the “Sworn Statement” form.

When the Contractor determines that work will need to be completed outside of the specified pay items, the “Work Directive” form shall be submitted to the Engineer and approved prior to said work commencing.

Except as hereinafter provided, the City will retain ten (10) percent from the partial payments of the amount earned up to fifty (50) percent of the Contract price. After fifty (50) percent of the Contract work is in place, the City will not hold additional retainage, unless the Engineer determines that the Contractor is not making satisfactory progress. If the Engineer determines the Contractor is not making satisfactory progress, the City may retain up to ten (10) percent of the value of the work over fifty (50) percent of the Contract price.

After final acceptance of the Contract work by the Engineer, he shall process a final estimate for the total amount due the Contractor, less the total amount of all previous payments. Except as hereinafter provided, the total amount due the Contractor shall include interest earned on retained amounts from partial payments.

Prior to final payment, and as a condition thereto, the Contractor shall furnish the City with a duly executed, notarized, affidavit or certificate, stating that all bills and claims have been satisfied, except as stated therein, and a release of all claims against the City arising under and by virtue of this Contract.

In case evidence exists that all bills with respect to the work have not been paid in full, the Engineer may retain out of any amounts due the Contractor, sufficient sums to cover all such unpaid bills.

Except as hereinafter provided, and at the City's option, a dispute regarding the percent retained from partial payments or regarding payment of interest on retained amounts, shall be settled in accordance with the provisions of Act 524 of the Public Acts of Michigan for 1980.

For a Contract having a dollar value of less than $30,000.00, or a Contract having three (3) months or less between the date of the Contractor and the Contract Time of Completion:

1. The City will retain ten (10) percent of the amount earned from partial payments.
2. The City will not pay interest on amounts retained from partial payments.
3. The provision to settle disputes in accordance with Act 524 will not apply.

SETTLEMENT OF DISPUTES

Any controversy of claim arising out of or relating to this Agreement, or the breach thereof, shall be settled either by commencement of a suite in Oakland County Circuit Court, the 48th District Court or by arbitration. If both parties elect to have the dispute resolved by arbitration, it shall be settled pursuant to Chapter 50 of the Revised Judicature Act for the State of Michigan and administered by the American Arbitration Association with one arbitrator being used, or three arbitrators in the event any party's claim exceeds $1,000,000. Each party shall bear its own costs and expenses and an equal share of the arbitrator's and administrative fees of arbitration. Such arbitration shall qualify as statutory arbitration pursuant to MCL§600.5001 et. seq., and the Oakland County Circuit Court or any court having jurisdiction shall render judgment upon the award of the arbitrator made pursuant to this Agreement. The laws of the State of Michigan shall govern this Agreement, and the arbitration shall take place in Oakland County, Michigan. In the event that the parties elect not to have the matter in dispute arbitrated, any dispute between the parties may be resolved by the filing of a suite in the Oakland County Circuit Court or the 48th District Court.

MAINTENANCE AND GUARANTY

The Contractor shall guarantee all the work furnished under this Contract against all defects in workmanship and materials, and incidental damage to other property, for a period of one (1) year following the date of the final acceptance of the work by the City. The Performance Bond shall fully cover all guarantees contained in this article.

CONFLICT OF INTEREST

The Contractor shall not directly or indirectly employ or otherwise use a City official of the City of Birmingham in conjunction with this contract. If subsequent to entering into the Contract a City official, a spouse, child or parent shall become directly or indirectly interested in the contract, the City shall have the right to terminate the contract without further liability if the disqualification has not been removed within thirty (30) days after the City has given notification of the disqualifying interest.

INSPECTOR CREW DAYS

It shall be the responsibility of the bidder to extend as a bid item in his proposal, when called for, the number of inspection crew days he requires for the completion of the project, times the unit price for inspection. The basis of computing crew days shall be as follows:

Total Hours Worked	Crew Days Charged
When an Inspector reports to the project and the Contractor decides not to work, or does not appear to work, weather permitting.	-One-half (1/2) crew day
Under four (4) hours	-One-half (1/2) crew day
Four (4) hours or more	-One (1) crew day

The above hours are only for the usual working days of Monday through Friday.

All Saturday work shall multiply the number of crew days by a factor of 1.5. All Sunday work shall multiply the number of crew days by a factor of 2.0.

All holiday work shall multiply the number of crew days by a factor of 2.0. Holiday work shall include all legal holidays, and any other days when the Municipal Building of the City of Birmingham is officially closed.

The amount bid shall be included in comparative evaluation of the bids. OMISSION OF THIS ITEM, WHEN CALLED FOR, SHALL BE CAUSE FOR REJECTION OF THE BID.

The City of Birmingham will bill the Contractor three hundred sixty ($360) dollars per day for each day they require inspection according to the Engineer. The bill must be paid monthly to the City of Birmingham Treasurer. A thirty (30) day grace period will be provided in which to pay

the inspection bill, after which a 1% per month late fee will be assessed. All inspection bills must be paid prior to issuance of final payment.

In the event that the number of crew days required is less than the amount bid, the excess shall be paid to the Contractor at the end of the project. If the number of days required is more than the amount bid, the pay item shall remain as the amount bid, and all days used shall be due to the City prior to final payment.

If the quantity of work under the Contract varies from that stated in the Proposal, the number of "crew days" allowed under the bid item shall be increased or decreased in proportion to changes in the total value of work under the Contract. This revision in the number of crew days shall be agreed upon at the time the Contract quantities are revised.

The Contractor shall give the City Engineer at least twenty-four (24) hours notice, exclusive of Saturdays, Sundays or holidays, when the project requires an increase or decrease in the number of Inspectors. Failure to observe this requirement will either necessitate the charging of one-half (1/2) crew day if the Inspector appears on the project, or the halting of all additional work until an Inspector is available. Unless the Inspector is notified in advance, crew days will be charged when an Inspector appears on a project and the Contractor decides not to work.

A separate crew day shall be charged for each and every Inspector or Engineer employed on a project for inspection purposes.

The number of Inspectors or Engineers required for the complete inspection of any project shall be as determined by the City Engineer.

One (1) Inspector or Engineer shall be assigned to each construction crew or each operation listed below:

<u>Operations to which crew days shall be charged</u>:

a) General

1. Material Testing (not the operations done by a testing laboratory).
2. Checking barricades and lighting.
3. Checking maintenance of traffic.
4. Emergency conditions, as determined by the Engineer.

5. Measuring quantities when said measurements are taken during one of the operations included within this list.

b) Clean-Up and Complaints

1. Replacement of driveways, sidewalks, pavement, etc.

2. Checking restoration and answering complaints.

c) Water Mains and Appurtenances

1. Excavation.
2. Laying of Mains.
3. Installing Valves and Hydrants.
4. Tunneling, Jacking or Boring of Water Mains.
5. Backfilling of Trenches.
6. Restoration of Existing Conditions.
7. Cleanup.
8. Pressure Testing.
9. Cleansing and Disinfecting.
10. Checking final installation for conformance to specifications prior to releasing for connections to be made.

The same Inspector may inspect the installation of hydrants, thrust blocks, gate wells, etc., in the proximity of the pipe laying operations, provided the Contractor cooperates to the extent that no portion of the work is covered prior to inspection.

d) Concrete Pavement

1. Excavation and Preparation of the Site.
2. Mucking and Filling Ditches.
3. Pavement Removal.
4. Subgrade Preparation and Fine Grading.
5. Adjusting and Reconstructing Existing Structures.
6. Sub-Base Construction.
7. Checking Form Alignment and Grade.
8. Placing of Concrete.
9. Constructing Compression Cylinders.
10. Finishing of Concrete.
11. Placing of Cold Weather Protection.
12. Sawing and Sealing.
13. Finish Grading.
14. Coring Finished Pavement (One (1) crew day will be charged for each twelve (12) cores taken).
15. Adjusting Existing Driveways and Sidewalks.
16. Seeding and Mulching.

17. Restoration.
18. Site Clean-Up.
19. Checking final pavement prior to final acceptance for conformance to specifications.

e) Sanitary and Storm Sewers, and Appurtenances

1. Excavation and Preparation of the Site.
2. Checking Sewer Pipe.
3. Installing Pipe Bed.
4. Laying Pipe.
5. Installing House Leads.
6. Tunneling, Jacking or Boring of Sewer.

i) Mining Operation.

ii) Placement of Concrete.
-One (1) Inspector in Tunnel.
-One (1) Inspector Top Side.

7. Constructing Manholes, Catch Basins, Inlets.
8. Backfilling.
9. Restoration.
10. Infiltration or Ex-Filtration Tests.
11. Site Clean-Up.
12. Final checking of sewers prior to releasing for connections to be made or placing in service.

The same Inspector may inspect the installation of manholes, catch basins, inlets, etc., in the proximity of the pipe laying operation, provided the Contractor cooperates to the extent that no portion of the work is covered prior to inspection.

f) Reinforced Concrete Structures

1. Excavation for Structure.
2. Sheeting.
3. Checking Forms and Resteel.
4. Placing of Concrete.
5. Backfilling Around Structures.
6. Checking Installation of Equipment.

g) Asphalt Paving and Pavement Resurfacing

1. Excavation.
2. Preparation of Subgrade.
3. Construction of Base.
4. Preparation of Existing Pavement.
5. Priming Base Course.

6. Construction of Bituminous Concrete Pavement or Surface.
7. Checking of Material.
8. Checking of Asphalt Plants.

9. Checking of Final Payment for Conformance to Specifications.
10. Restoration.
11. Site Clean-Up.

Inspection rates for crew days will be charged as follows:

1/2 Day = $180.00
1 Day = $360.00

No payment on inspector crew days shall occur while the project is in progress. Upon final evaluation and inspection approval inspector crew days will be calculated and paid along with the final payment of the project to the contractor.

IRAN SANCTIONS ACT VENDOR CERTIFICATION FORM

For East Side Sewer Video Inspection Project

Pursuant to Michigan Law and the Iran Economic Sanction Act, 2012 PA 517 ("Act"), prior to the City accepting any bid or proposal, or entering into any contract for goods or services with any prospective Vendor, the Vendor must certify that it is not an "Iran Linked Business", as defined by the Act.

By completing this form, the Vendor certifies that it is not an "Iran Linked Business", as defined by the Act and is in full compliance with all provisions of the Act and is legally eligible to submit a bid for consideration by the City of Birmingham.

PREPARED BY **(Print Name)**	**DATE**
TITLE	**DATE**
AUTHORIZED SIGNATURE	**E-MAIL ADDRESS**
COMPANY	
ADDRESS	**PHONE**
NAME OF PARENT COMPANY	**PHONE**
ADDRESS	
TAXPAYER I.D.#	