City of Birmingham
A Walkable Community

MEMORANDUM

Engineering Dept.

DATE: **October 13, 2016**

TO: **Joseph Valentine, City Manager**

FROM: **Paul T. O'Meara, City Engineer**

SUBJECT: **Parking Structure**
Traffic Control Equipment Upgrades
Phase 2 of Contract #15-15(PK)

Outside of the Chester St. Structure, the traffic control equipment at the other four parking structures dates to 2008. At that time, the City began phasing out payments through cashiers, and purchased a system that was automated. As the machines have aged, their reliability has decreased. The complex cash handling machines, in particular, have been problematic the past few years. Costs for repairs have been mounting. Rather than continuing to invest in these machines, staff worked with SP+ Parking and developed a plan to phase out the current system and invest in newer, improved technology.

After review with the Advisory Parking Committee, a bid package was put together to provide pricing to replace all traffic control equipment under a two phase approach. Phase I was to complete work at the Chester St. Structure only. The new system would employ the latest technology, using "credit card in-credit card out" for customer identification. Moving to this platform would result in significant savings for the system, not only in the initial purchase of the equipment, but also in annual maintenance and supplies costs (cash handling and bar coded ticket purchases are significant ongoing expenses). Knowing that moving to this system would result in some negative feedback from the public, we selected our lowest daily demand location. The contract was written such that the City would have a six month period to evaluate the success of Phase 1 before proceeding with Phase 2.

In the Phase 2 portion of the bidding documents, contractors were asked to provide prices for either the credit card in-credit card out cashless system, as well as a more traditional system offering both tickets (for customer identification) and the ability to pay by cash.

Bids for this package (known as Contract #15-15(PK)) were opened on August 14, 2015. After review by staff, staff recommended awarding Phase 1 of the contract to Harvey Electronics (representing equipment made by Skidata) for $195,000. The Skidata brand was selected even though it was not the low bid, due to the improved capabilities and performance records of the Skidata brand.

The new equipment installation was completed at the Chester St. Structure during the weekend of April 23-24. While the new system did not allow customers to pay with cash, the change which generated the most comment was the lack of a ticket being available upon entry into the structure. Each customer is required to produce either a credit card or debit card to insert into the entrance machine. Doing so provides an identifer, and allows the system to record how

much time the customer is in the structure. Upon exit, the customer must again present that same credit or debit card not only as an identifier, but also to process a payment.

Efforts were made to educate and assist the public in this transition, but negative reaction to the lack of a ticket was strong. After several months review, staff determined that it could not recommend moving forward with this system for the remaining four parking structures. These concerns were first introduced to the Advisory Parking Committee at their meeting of August 17. Staff recommended that rather than moving forward with both ticket handling machines and cash machines, providing a modification in the middle made the most sense.

The local installer, Harvey Electronics, was asked to provide pricing at all five parking structures wherein the customer would be offered the option to pull a ticket upon entry. Pulling a ticket will become optional. Regular customers that understand the system and wish to speed up their transaction will have the option of using their credit or debit card as their identifier, which will allow them to skip the need to handle a ticket during their visit. Upon exit, all customers will still have to pay with credit or debit card; cash payments will not be available. Short term customers that plan to stay less than two hours would be advised to take a ticket, so that their personal information need not be entered into the system.

At the meeting of September 21, the Advisory Parking Committee reviewed this issue again, now with pricing available for the four remaining parking structures. Staff feels that the pricing is about what was expected, being about half way between the original two option pricing, as shown below:

Parking Structure	Cash & Tickets	No Cash or Tickets	Tickets & No Cash
Pierce	$271,000	$162,000	$231,824
Park	200,000	119,000	150,541
Peabody	206,000	125,000	159,730
N. Old Woodward	148,000	95,000	141,275
TOTALS	**$825,000**	**$501,000**	**$683,370**

If the City proceeds with converting the remaining four parking structures to a system that offers tickets but no cash payments, it is recommended that the Chester St. Structure equipment be converted to this as well, allowing the payment method to be the same at all five locations. For the Chester St. Structure, the contractor has offered to bring in all new machines at the entrance lanes, and remove the existing machines (which will then become their property). The cost to complete the work at the Chester St. Structure is estimated at **$69,900.** The total cost to implement the remaining work would be the sum of the two, or $753,270.

After discussion, the Advisory Parking Committee passed the following motion:

To recommend that the City Commission authorize the installation of the Skidata brand traffic control equipment at the four remaining parking structures using equipment that will not take cash, but will offer traditional tickets as a customer identification system. Further, to recommend that the new equipment at the Chester St. Structure be modified to offer customers the option of being identified with tickets instead of the current card only identification system.

Based on this motion, a motion to award Phase 2 of Contract #15-15(PK) is provided for your consideration below:

SUGGESTED RESOLUTION:

To award Phase 2 of Contract #15-15(PK), Parking Structure Traffic Control Equipment, to Skidata, consisting of the retrofit of equipment at the Chester St. Structure, as well as complete new cashless payment equipment at the remaining four parking structures such that customers will be offered the option of a bar coded ticket upon entry as an identifier, in the amount of $753,270, charged to the following accounts:

Pierce St.	585-538.002-971.0100	$231,824
Park St.	585-538.003-971.0100	150,541
Peabody St.	585-538.004-971.0100	159,730
N. Old Woodward Ave.	585-538.005-971.0100	141,275
Chester St.	585-538.008-971.0100	69,900
TOTAL		$753,270

HARVEY ELECTRONICS & RADIO

28243 Beck Rd., Unit B-16
Wixom, MI 48393

Estimate

Date	Estimate #
8/22/2016	440

Name / Address
CITY OF BIRMINGHAM MR. PAUL O'MEARA 151 MARTIN P.O. BOX 3001 BIRMINGHAM, MI 48012

Project

Description	Qty	Cost	Total
Skidata Barrier Gate W/ 12' folding boom	6	5,700.00	34,200.00
Skidata Entry Column	3	22,330.00	66,990.00
Skidata Exit Column CC Out	3	23,946.00	71,838.00
Axis Network Camera	8	2,150.00	17,200.00
Drop in 4 slot Capacity sign	4	2,249.00	8,996.00
LICENSE FOR 8 SUBSCRIBERS, FEATURE LEVEL B	4	1,033.00	4,132.00
SKIDATA Software License Value Points	46	278.00	12,788.00
Skidata Parking Installation	160	98.00	15,680.00

Pierce

Subtotal	$231,824.00
Sales Tax (6.0%)	$0.00
Total	$231,824.00

HARVEY ELECTRONICS & RADIO

28243 Beck Rd., Unit B-16
Wixom, MI 48393

Estimate

Date	Estimate #
8/22/2016	441

Name / Address
CITY OF BIRMINGHAM MR. PAUL O'MEARA 151 MARTIN P.O. BOX 3001 BIRMINGHAM, MI 48012

Project

Description	Qty	Cost	Total
Skidata Barrier Gate W/folding 12' boom	4	5,700.00	22,800.00
Skidata Entry Column	2	22,330.00	44,660.00
Skidata Exit Column CC Out	2	23,946.00	47,892.00
Axis Network Camera	6	2,150.00	12,900.00
Drop in 4 slot Capacity sign	4	2,249.00	8,996.00
SKIDATA Software License Value Points	30	278.00	8,340.00
LICENSE FOR 8 SUBSCRIBERS, FEATURE LEVEL B	1	1,033.00	1,033.00
Skidata Parking Installation	40	98.00	3,920.00

Park Street

Subtotal	$150,541.00
Sales Tax (6.0%)	$0.00
Total	$150,541.00

HARVEY ELECTRONICS & RADIO

28243 Beck Rd., Unit B-16
Wixom, MI 48393

Estimate

Date	Estimate #
8/19/2016	438

Name / Address
CITY OF BIRMINGHAM MR. PAUL O'MEARA 151 MARTIN P.O. BOX 3001 BIRMINGHAM, MI 48012

Project

Description	Qty	Cost	Total
Skidata Barrier Gate W/ 12' folding boom	4	5,700.00	22,800.00
Skidata Entry Column	2	22,330.00	44,660.00
Skidata Exit Column CC Out	2	23,946.00	47,892.00
Axis Network Camera	6	2,150.00	12,900.00
Drop in 4 slot Capacity sign	2	2,249.00	4,498.00
LICENSE FOR SUBSCRIBERS, FEATURE LEVEL B	4	1,033.00	4,132.00
SKIDATA Software License Value Points	42	278.00	11,676.00
Skidata Parking Installation	114	98.00	11,172.00

Peabody

Subtotal	$159,730.00
Sales Tax (6.0%)	$0.00
Total	$159,730.00

HARVEY ELECTRONICS & RADIO

28243 Beck Rd., Unit B-16
Wixom, MI 48393

Estimate

Date	Estimate #
8/22/2016	439

Name / Address
CITY OF BIRMINGHAM MR. PAUL O'MEARA 151 MARTIN P.O. BOX 3001 BIRMINGHAM, MI 48012

Project

Description	Qty	Cost	Total
Skidata Barrier Gate W/ 12' boom	4	5,700.00	22,800.00
Skidata Entry Column	2	22,330.00	44,660.00
Skidata Exit Column CC Out	2	23,946.00	47,892.00
Axis Network Camera	6	2,150.00	12,900.00
Drop in 4 slot Capacity sign	3	2,249.00	6,747.00
SKIDATA Software License Value Points	12	278.00	3,336.00
Skidata Parking Installation	30	98.00	2,940.00

Subtotal	$141,275.00
Sales Tax (6.0%)	$0.00
Total	$141,275.00

HARVEY ELECTRONICS & RADIO

28243 Beck Rd., Unit B-16
Wixom, MI 48393

Estimate

Date	Estimate #
9/21/2016	444

Name / Address
CITY OF BIRMINGHAM MR. PAUL O'MEARA 151 MARTIN P.O. BOX 3001 BIRMINGHAM, MI 48012

Project

Description	Qty	Cost	Total
Skidata entry column with CC in	2	22,330.00	44,660.00
Skidata Exit Column CC in CC Out	3	23,946.00	71,838.00
Credit to buy back old equipment	1	-50,000.00	-50,000.00
Installation Fee	1	3,402.00	3,402.00

Subtotal	$69,900.00
Sales Tax (6.0%)	$0.00
Total	$69,900.00

City of Birmingham
A Walkable Community

MEMORANDUM

Engineering Dept.

DATE: **August 31, 2015**

TO: **Joseph Valentine, City Manager**

FROM: **Paul T. O'Meara, City Engineer**

SUBJECT: **Parking Structure Traffic Control Equipment**
Contract #15-15(PK)

As you know, the maintenance and operation of the City's five parking structures is contracted to SP+ (until recently known as Central Parking). In addition to handling staffing, maintenance, and collections, SP+ is also responsible to ensure that all of the traffic control equipment at structure entrances and exits operates properly. The following is a brief summary of the equipment operation for daily traffic in our structures:

PRIOR TO 1997:

Like other controlled parking operations, Birmingham controlled traffic by the use of relatively simple equipment such as ticket spitters and gates at the entrances, and a cashier at the exit. All payments were in cash.

1997 – 2008:

In late 1996, the parking system implemented the rate structure still being used predominantly today, wherein the first two hours of a visit are free, and then the charge is $1 per hour up to $5. During committee discussion that led up to this change, there was an emphasis on implementing changes to make it a faster transaction for the customer. Exit verifiers were installed at all exits to allow customers to exit at any lane if they knew they had been there less than 2 hours, whether a cashier was present or not. These helped reduce wait times during exiting. Those that had to pay still had to use an attended cashier lane.

2008 – 2012:

With the increasing reliability and prevalence of cash payment machines, the City took the step of removing all cashiering at the Park St., Peabody St., and Chester St. Structures. The effort helped reduce labor costs substantially, as less SP+ staff had to be on hand at each parking structure. Cashiers were left at Pierce St. and N. Old Woodward Ave., as it was felt at the time that these locations would have a more difficult time being converted.

The complexity of the machines, and the value of the machines, increased significantly at this time. Payment machines built so that customers would walk up and pay before going to their car were placed in multiple locations to encourage transactions to occur before arriving to the

exit lane. However, if the customer did not pay in advance, the option of paying in the exit lane was always made available (usually with credit or debit card only – cash handling tends to slow down the operation).

2012 - PRESENT:

The transition to operating without cashiers went smoother than anticipated. In 2012, the remaining two cashier booths were taken out, and replaced with payment machines (cash, credit, or debit) under shelters in the exit lanes. These transitions went smoothly as well.

When the major transition to payment machines occurred in 2008, Birmingham was one of the first municipalities to operate a parking facility in this way in Michigan. While risks were involved, we felt that the relative sophistication of Birmingham clientele were ready for the change. Overall, the move has been a positive one, with a major savings resulting. The main drawback, as time goes on, is the reliability of the payment machines, particularly those that handle cash. The first cash machines are now over six years old, and some of them have caused ongoing problems for the operation and for customers when they are not functioning.

The machines were purchased through Traffic & Safety Control Systems, Inc., who is the sole local distributor for Amano/McGann equipment. Historically, parking operators in the Detroit area had two choices for equipment purchases and maintenance. Other than Traffic & Safety, another firm marketed and serviced Federal APD equipment. However, by the mid-2000's, Amano/McGann equipment was considered superior. It's product line was being modernized and invested in, and by this time, there was really no other choice but to work with Traffic & Safety. Having a monopoly in the local market was reflected in prices. At this time, a walk up cash payment machine cost over $70,000 each. With its many moving parts, these machines have been particularly vulnerable to ongoing maintenance problems.

During the 2008 upgrade, most of the existing equipment (gates, ticket spitters, exit verifiers) was either left in service or modified to operate with the new equipment. These efforts helped keep costs down. However, some of the equipment in service is now over 15 years old, and is becoming unreliable. While SP+ employs a full time maintenance person that focuses on repairing and maintaining the equipment, as its complexity has increased, the need for help from the experts at Traffic & Safety has increased. In fiscal year 2013/14 approximately $119,000 was spent in equipment maintenance. In fiscal year 2014/15, over $98,000 was paid to just Traffic & Safety to help repair equipment or replace parts. SP+ started talking with our office about the need for a complete system overhaul. The benefits of an overhaul at this time come from a few different angles:

1. Now that the local recession is over, other international firms have taken an interest in the Detroit market. While Amano/McGann equipment has been modernized recently, other equipment manufacturers are also now able to market and maintain their equipment in this area. Not only does this give Birmingham the opportunity to select other products, but it introduces true competition that was not there in the past, resulting in potentially major savings.
2. As with most things involving electronics, capabilities and choices are providing new and exciting features that were not available in the past. Customers can now set up accounts in Parkmobile, Google Wallet, and Apple Pay. These choices and features lead

us to believe that it may be time to eliminate cash from the system, as discussed further below.

INFORMAL BID

Acknowledging the ongoing maintenance problems with our current equipment, I directed SP+ to learn more about the current market, both what could be purchased, and what the costs would be. They felt that the only serious vendors that could compete in this market would be Amano/McGann, marketed and serviced by our traditional vendor Traffic & Safety, and Skidata, marketed and serviced by a relatively new company called Harvey Electronics.

1. Amano/McGann has within the last year introduced a new and improved line of parking control equipment. It offers several new features that were not available in the past. The Opus System from Amano McGann is currently being rolled out nationwide. However, very few locations are fully utilizing the new product. Because it is so new, the current lack of installations has not allowed SP+ to properly gauge the new features offered by the new equipment line.
2. Skidata, while new to the Detroit market, has been manufactured and installed in thousands of locations worldwide. In the United States, they have focused more on the larger markets of Los Angeles, Chicago, and New York. Now that they are established, they are moving into new areas such as Detroit.

SP+ put together a list of needs for both firms, and asked for proposals. Results were submitted, and reviewed with the Advisory Parking Committee (APC) in May. The report put together for the APC at that time is attached. While the Skidata package was higher priced, SP+ noted that installing a system at Chester St. that did not offer a cash payment option would make the cost differential minor. Labor and long term maintenance costs would also be reduced if a cashless option was implemented. After reviewing the issue, the APC recommended that the Chester St. Structure be upgraded to new Skidata cashless equipment first, as a pilot, before proceeding with ordering equipment elsewhere.

While we were preparing to move this idea forward to the City Commission, Traffic & Safety heard that we were preparing to purchase equipment from their competitor. They then submitted a revised quote where prices were cut further, and an unheard of five year warranty would be offered. At this point, the informal nature of these discussions became a concern for our office. Rather than proceeding, I asked SP+ to go back and prepare a formal bid package that both lists everything that is really needed for the system, to ensure that all vendors (including anyone else that may be interested) would be pricing the same level of equipment. That is, the amount of money involved in this demanded that a fair open bid process be run so that a true cost comparison can be obtained.

With assistance from our office, SP+ put together a bid package known as Contract #15-15(PK).

After reviewing the issue with the APC, staff was confident that running a cashless pilot at the Chester St. Structure is the direction that the City should go. Bidders were asked to give a price to install a cashless system at Chester St. soon after award (again as a pilot). A six month testing period would then be run to see how the new equipment works. (Chester St. was

selected as the pilot because the number of daily transactions is lower, and if there are problems with customers needing help, office staff is located at the entrance and exit area.) Bidders were then asked to provide a price for two options, to be installed about six months later. The two options would be to install a cash system at the remaining four structures, or a cashless system at the remaining four structures. Labor costs during the five years after installation was also to be calculated as a part of the bid.

Bids were due on August 14. Bid results are attached. Based on price, Amano/McGann is the lowest total cost for both options. If the City decides to go with cash payments in the remaining four structures, the Amano/McGann price difference is significant. However, if no cash payments are accepted system wide, the price difference between the three becomes smaller.

Staff feels that operating the system without cash is the direction the City should proceed. We feel confident that most customers have some form of electronic payment option available when they visit Birmingham. For those few that do not, the system will be able to offer a pre-paid debit card of its own for those that visit regularly. The Advisory Parking Committee also endorsed this approach. However, should the public reaction at Chester St. be too negative, the City will have the option to install cash machines at some or all of the other structures. Not offering cash not only reduces equipment purchase costs, it results in the following other operational benefits:

1. Labor: Several hours per day are used each day today collecting and handling cash from various points within the system. It is estimated that $36,000.00 in labor costs can be saved each year.
2. Tickets: The parking system issues 1.3 million tickets to customers each year. Current equipment uses mag-stripe tickets that result in costs in the area of $15,260.00 to stock every ticket spitter. Newer generation cash machines will issue bar coded tickets, but the special paper that they must be printed on also results in similar costs. When no cash option is provided, tickets are no longer necessary. Customers are identified upon entry, inserting their card or displaying their mobile payment device. They are asked to display the same payment method upon exit, so no other form of parker identification is required.
3. By removing both ticket handling and cash handling from the system, the complexity of the payment machines is significantly reduced. By simplifying the machines, it is expected that maintenance costs will drop and reliability will go up. (Many of the reliability problems currently being contended with have to do with moving parts.)

Finally, it is important to note that about 67% of all current paying customers (measured as amount of dollars collected) are selecting a credit/debit payment option over cash. This number is increasing each year. Once these other new payment options become available, we expect that cash would become even less desired (if we continued to offer a cash payment option).

Once the decision to move to a cashless platform is made, the cost difference between the three companies is relatively minor. Equipment features and long term reliability must be considered. SP+ has assembled several reasons why they feel that Skidata is the best choice (attached). While the Amano/McGann equipment also has several positive elements, it is new

to the market, and has not been time tested in the field. Finally, Tiba equipment is not as robust as Skidata. It is sold primarily in Israel (where it is made), and the United States. While it could meet our needs, it does not have its own barrier gates, nor the additional features (building access, digital videos), sophisticated look, and track record of the Skidata equipment, and is about the same cost as Skidata, it is not being recommended.

At the time the current budget request was prepared (nine months ago), we envisioned slowly transitioning the system to new equipment, focusing on one parking structure each year for five years. The budget requested $250,000 each year for five years, starting in 2015-16. After learning more about what would make the most sense, and the importance of operating a central updated system that works cohesively at all five structures, we now know that it is important that we proceed with a more timely conversion. At this time, an equipment replacement overhaul at the Chester St. Structure is recommended, using the Skidata equipment, at a price of $195,000. Funds for this work is budgeted. Once the equipment is installed and operating, the test period will begin to see how the new system works. We plan to summarize the findings of the test period in about six months with both the Advisory Parking Committee and the City Commission. At that time, a recommendation to purchase equipment at the remaining four parking structures will be forwarded.

SUGGESTED RESOLUTION:

To accept the recommendation of the Advisory Parking Committee to purchase new traffic control equipment at the Chester St. Parking Structure without cash payment being available, and to award Contract #15-15(PK), Parking Structure Traffic Control Equipment, to Skidata, approving the purchase of cashless payment equipment for the Chester Street Parking Structure in the amount of $195,000, charged to account #585-538.001-971.0100 (phase 1 of the contract). And further, to ask the Advisory Parking Committee to review the cashless system and return to the City Commission with a recommendation on whether to continue with the cashless system at the remaining parking structures, prior to awarding the remaining phase 2 of the contract.

City of Birmingham Contract #15-15(pk) PARCS comparison

Cash Option	Amano McGann	Ski Data	Tiba
Chester	$151,662.00	$195,000.00	$193,520.00
Pierce	$201,118.00	$271,000.00	$218,800.00
Park	$145,046.00	$200,000.00	$223,110.00
Peabody	$126,257.00	$206,000.00	$181,920.00
N. Old Woodward	$96,612.00	$148,000.00	$132,495.00
Subtotal	**$720,695.00**	**$1,020,000.00**	**$949,845.00**

Cashless Option	Amano McGann	Ski Data	Tiba
Chester	$151,662.00	$195,000.00	$193,520.00
Pierce	$169,080.00	$162,000.00	$152,760.00
Park	$129,772.00	$119,000.00	$112,760.00
Peabody	$110,984.00	$125,000.00	$106,150.00
N. Old Woodward	$82,632.00	$95,000.00	$108,375.00
Subtotal	**$644,130.00**	**$696,000.00**	**$673,565.00**

Labor	**Amano McGann**	**Ski Data**	**Tiba**
Years 1-2	$23,400.00	$23,400.00	Under Warranty
Years 3-5	$105,300.00	$87,150.00	$147,000.00
5 year cost cash (est.)	**$849,395.00**	**$1,130,550.00**	**$1,096,845.00**
5 year cost credit (est.)	**$772,830.00**	**$806,550.00**	**$820,565.00**

To: Paul O'Meara City Engineer

From: Joshua Gunn, Jay O'Dell SP+

Date: August 27, 2015

RE: PARCS Recommendation

SP+ is recommending SKIDATA equipment for the new Parking Access Revenue Control Systems. SKIDATA is tried and true in over 100 different countries and have just completed their 10,000th install. Their equipment is installed at many large parking facilities in the United States including Dallas Fort Worth International Airport, the 4th largest airport in the United States. SP+ manages multiple locations using SKIDATA PARCS and can attest to its ease of use and dependability. The following is a summary of the advantages we feel make the extra expense worth the investment, followed by more detailed explanations on pages 2 and 3.

Competitive advantages

I. Aluminum housings will not rust as our current equipment started to after just 2 years.
II. Centralized operating system contained on one server making it easier to respond to alerts and manage/monitor all structures.
III. Balancing peak demand - During high ingress/egress all the equipment will help process monthly passes, ticket pulls, payments, gate openings and closings instead of relying fully on the processing power of our main server.
IV. Alerts - Gates breaking, tickets getting low/running out, ticket or credit card jam, reader offline/not functioning - All these issues will alert our staff via an escalating text message and an alert on our operating system.
V. Upgrades - SKIDATA offers many products in their line not limited to but including building entry, License Plate Recognition, storage lockers accessed via cell phones with delivery capabilities.
VI. Compatible - All 3rd party vendors designed specifically to integrate with SKIDATA equipment. Integrates with Parkmobile, Google Wallet, Apple Pay.
VII. Rechargeable cards - For cashless locations people can purchase a rechargeable access card. It can be recharged at any SKIDATA pay machine, and our office.
VIII. Advertise on tickets and the screens of the pay stations can play short clips great for Day on the Town, Birmingham Ice Show, Village Fair, Holiday Tree Lighting, or sell/loan the air time to local businesses.

Expanded Competitive advantages

II. Centralized operating system

The centralized operating system we currently have is housed on 4 separate servers. To access information we may have to toggle between 3 of the 4 servers to help a single customer.

SKIDATA offers a duel server operating system that contains all operating information on one server while processing credit cards on a dedicated server to maintain PCI compliance. This will allow better, faster service to individuals experiencing problems at the entrance or exit.

III. Balancing peak demand

We currently experience high ingress around 9:00 AM and high egress around 5:00 PM. This high amount of traffic at one time taxes our current operating system which delays gate openings, and payment processing.

SKIDATA equipment works in tandem to balance the work load to all machines. Essentially every unit is an individual computer and the system will use the processing power of every pay station, entry, and exit unit so there is minimal delay during peak times. This will improve entry and exit times, lessen complaints, and provide a better overall parking experience.

IV. Alerts

As described above, there are several problems that can occur that require quick attention by our staff, such as a broken gate. Ticket jams are the most common. Our current alert system is located on one of four servers and must be visually seen by someone in the office if they happen to be on that particular server.

The new alert system will have the ability to send out a text message to our lead maintenance person. After a given amount of time it will escalate to the supervisor if the issue is not corrected. The system will also send an alert that the problem has been fixed and document how much time elapsed to remedy said alarm. The alarms issued include a broken gate, ticket jam, low tickets, out of tickets, ticket jam, motor failure on ticket acceptor, monitor failure, credit acceptor failure,

and door alarms. There are sensors on most pieces of the equipment that can fail which will alert the appropriate people when an error occurs.

V. Upgrades –There are numerous upgrades that SKIDATA can offer. The company started out as a ski lift operating software company which transitioned into building access equipment, large venue crowd control (stadiums/airports), and parking equipment. Features that could be explored in the future would include interconnecting a bike storage room with controlled access to the public, or even rented storage lockers for those wishing to use this feature.

VI. Compatible

SKIDATA is partnered with or makes all the components inside of their equipment as well as their software. To improve interactions with the public when they need help at gates, we specified the Commend intercom system. Commend is tailor made to SKIDATA and comes standard, unlike competitors. Diester Electronic is UHF (monthly card reader) which you will find in SKIDATA equipment. Parkmobile has been a huge success here in Birmingham; customers will now be able to use it to enter the garages as well as the meters. Google Wallet and Apple Pay use near field technology through mobile devices instead of customers pulling tickets.

VII. Rechargeable Cards

These cards will look and act like a monthly pass. It will act in lieu of a ticket upon entering the garage and debit the charge when the customer leaves the garage. Customers/business owners can pre-load these cards with $10, $50, $100 etc. and use it for entry and exit. Many of the large businesses who buy validations may find this attractive. They wouldn't have to daily hand out passes to employees or frequent guests. It may also be an option for those who frequent the downtown area. Customers will be able to recharge their "debit cards" at our office, or any pay station, and possibly online.

VIII Advertisements

The touch screen monitor will allow small videos to be played. This can be helpful to convey events happening downtown, important announcements, etc. We will have the capabilities to limit what time the video is allowed to play so it doesn't interfere with high traffic times. We can also control when the video plays and which machines will play said videos.

Picture may vary from actual product

Power.Gate

The universal multi-talent among parking columns offers comprehensive possibilities for the ticketing sector with the most modern and diverse ticket technology. Expand your business models; become part of urban solutions.

Power.Gate will support you at its best!

Your Business Card

- **High-Quality Design**

High-class materials and glowing features blend elegantly into all types of architecture.

- **Make a Lasting Impression**

Expert-optimized operational guidance for look and sound provide positive user experiences.

Marketing Terminal with Ticketing

- **Comprehensive Advertising Opportunities**

Get your equipment financed.

- **Professional Image**

A back-glowing, bright and high-resolution display effectively draws attention to logos, images and promo videos.

Optimize Your Investment

- **Suitable for Every Budget**

A customized solution for every application.

- **Protect Your Investment**

Future-proof due to flexible options for expansions and installations.

- **Save Money on Your Expenditures**

Smooth investment expansion and renewals thanks to the random miscibility of SKIDATA parking columns.

Efficiency Increase with Quality

- **Optimized Service Planning**

Great capacities and intelligent systems reduce your service efforts.

- **Elaborated Technology**

Touch-free RFID and barcode technology guarantee the highest level of reliability and low follow-up costs.

Save Money and Protect the Environment

- **Minimize Your Power Usage**

Situational energy saving modes and no heating above –20 °C (–4 °F) stand for a high energy effeiciency.

- **Recyclable Materials**

Ressource-efficient due to a high degree of reusability.

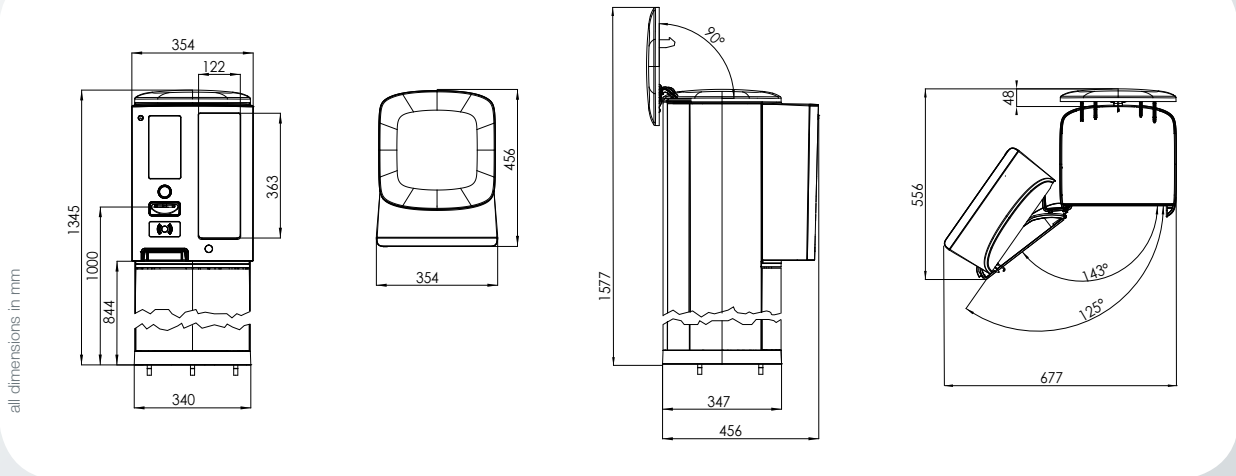

Features

Design/Construction

- Unique design based on aluminum and high-grade synthetics, complemented by optional, stylish light elements
- Modular, easy to maintain construction
- Flexible extension options ensure maximum investment protection
- Weather-proof, thanks to use of durable high-grade materials, such as aluminum
- Ethernet interface for efficient system integration
- Large installation space for add-on modules (e.g., PIN pad, credit card reader, etc.)

Operation

- Intuitive user interaction helps to ensure very high processing rates

Green Efficiency

- Optimised for low power consumption; no heating required down to –20 °C (–4 °F)
- Materials provide high degree of re-usability

Options

Design/Construction

- LED light bar serves as a stylish, illuminated eye-catcher
- Available in custom colors

Ticket Processing

- Coder Unlimited ensures flexible ticket processing
- Coder Basic enables cross-wise bar code ticket processing and punch-hole validation
- RFID module for reading and encoding 13 MHz Keycards
- Double ticket intake (up to 2 × 7000 tickets) with automatic data carrier management
- Large ticket collecting box (holds approx. 3000 tickets)
- Ticket separation ensures smooth, highly reliable ticket processing

Communication

- Analog intercom
- Integrated digital intercom (Ethernet)

Display

- Bright high-resolution graphics display ensures good readability under any light conditions; supports clear, vivid display of commercials and videos (with automatic brightness adjustment); 800 × 480 pixels
- Outdoor capable touch screen for additional Parking Column control functions (can be operated while wearing protective gloves)
- Sophisticated display modes support various applications and design options
- Illuminated control elements
- Visual and acoustic feedback provides additional user support

Accessories

- Locking system with mechanical or electronic locks, supports configurable access permissions
- Various contact and interface extensions to suit a wide range of requirements
- Heater for extremely low ambient temperatures

Technical Specifications	
Dimensions	354 mm × 1345 mm × 456 mm (B × H × T)
Weight	30 kg (without adapter base)
Operating voltage	100-240 V ±10 % / 50-60 Hz
Coding units	Coder Unlimited or Coder Basic
Operating temperature	–20 °C (–4 °F) to + 50 °C (122 °F) under sun exposure
Operating temperature with additional heater	–30 °C (–22 °F) to +50 °C (122 °F) under sun exposure (mandatory with Coder)
Operating temperature with additional heater big	–40 °C (–40 °F) to +50 °C (122 °F) under sun exposure
Max. ambient humidity	90 % (non-condensing)
Support stand color	Brushed, anodized aluminum
Cover color	RAL 7037 Dusty Grey (varnished plastic)
Pedestal base color	RAL 7043 Traffic Grey (powder-coated aluminum die cast)
Panel color	RAL 7021 Black Grey (varnished plastic)
Declarations / Certifications	CE, FCC, IC, $_{C}$NRTL$_{US}$
Degree of protection based on IEC 60529	IP43

SKIDATA AG • Untersbergstraße 40 • A-5083 Grödig/Salzburg
[t] +43 6246 888-0 • [f] +43 6246 888-7 • [e] info@skidata.com [w] www.skidata.com • Version 1.1 • 19.02.2014

©2014 SKIDATA AG. All rights reserved.
The content provided herein is subject to change and possible editorial errors. Country-specific versions may vary. SKIDATA® is a registered trademark of SKIDATA AG in the USA, the European Union and other countries. Terms and conditions of the authorized SKIDATA distributor apply. The operator is fully responsible for compliance with any legal provisions applicable to the operation of the products.

Picture may vary from actual product

Credit.Cash

The **cashless** option among SKIDATA pay-on-foot machines provides full cashless payment support **for your customers** – **it's easy, quick and secure**. Credit.Cash lets you present your business with a **modern design** while benefitting from **highly reliable technology** and **low maintenance costs.**

Credit.Cash – Your benefits

- **Cashless payment**
  Patrons can pay conveniently by credit card – no need for complicated cash management.
- **Smart looks**
  Present your business in a modern design based on your company colors.
- **Safe investment**
  Maximizing benefits at minimum risk.

Your business card

- **Demonstrating presence**
  Credit.Cash's modern design matches both contemporary and traditional architecture while giving your business proper exposure.
- **Individual style**
  Accentuate your unique corporate presence with your logo and company colors.

Utilizing potential

- **Modern ticketing**
  Take advantage of Print@Home, RFID, magstripe and barcode technologies.
- **Planned growth**
  Easy-to-install extension options support new business models and numerous co-operation options.

Eliminating risks

- **Intelligent key management**
  Operator.Services 'Webkey' brings full transparency to your key management.
- **Refined technology**
  Internationally proven technology guarantees high reliability and availability.
- **No initial cash required**
  Easily cut costs and risks.

Paying cashless

- **Cashless payment made easy, fast and secure**
  No need to handle cash – and accounting gets easier, too!
- **Make the cost efficiency work for you!**
  Increase your presence through several cost-efficient pay-on-foot machines

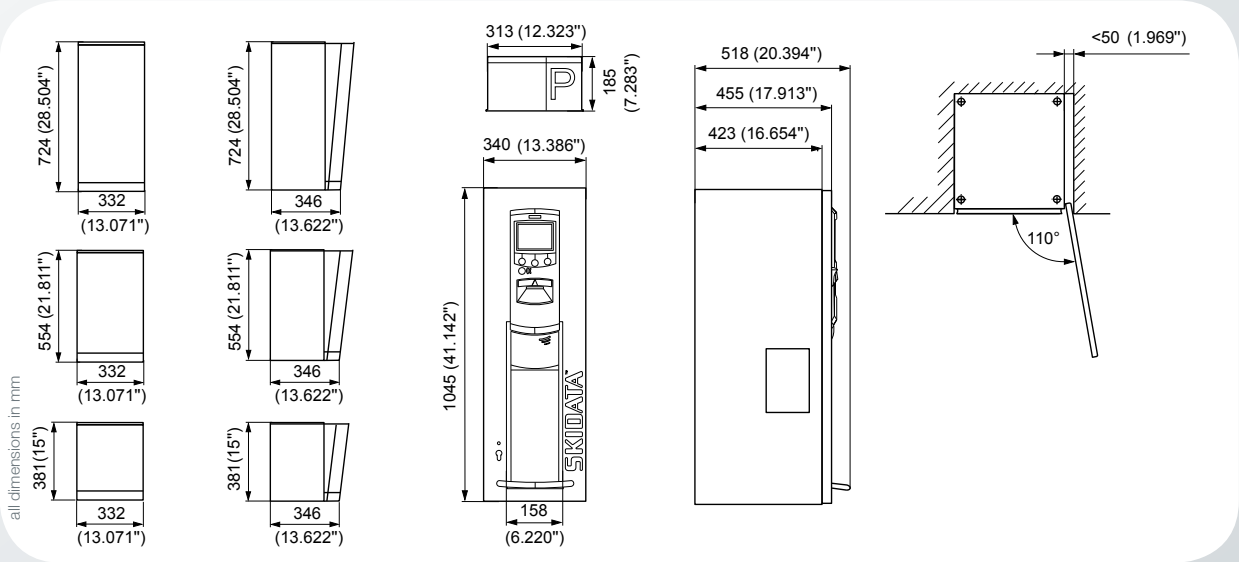

Features

Design/Structure

- Compact, modern design
- Basic unit powder coated steel enclosure and design elements made from polycarbonate
- Expansion bays for add-on components, such as pin pad, credit card terminal, and fiscal printer
- Analog intercom station, alarm function, call button and 3 soft keys, buffer memory (ensures proper transaction management in case of power failure)
- Heater, cooling fan, and power supply
- Issuing of up to 3000 receipts
- Control unit, complete with hard disk

Operation

- TFT 14.5 cm (5.7'') color display, break-proof monitor screen
- Ergonomically arranged user interaction controls
- User guidance with graphic color display and illuminated pictograms
- Users can switch on-screen language at any time
- Extremely easy to operate by staff

Options

Design/Structure

- Illumination attachment (integrated “Parking” sign, space for custom logo or other symbols)
- Pedestal (optionally with or without front door panel)
- Pedestal “elevated” (optionally with or without front door panel)
- Wall-mount console

Coder/ticket technology

- Coder Unlimited (supported data carrier formats depend on modules selected)
- Coder Basic (for cross-wise barcode and validation via hole punch)
- RFID Module (for reading and writing/coding of keycards)
- Print@Home Scanner

Technical Specifications

Dimensions	340 mm x 1045 mm x 455 mm / 13.39" x 41.14" x 17.91" (w x h x d) – without pedestal
Height with Pedestal “elevated”	1769 mm / 69.65"
Power supply	230 V AC / 50 Hz; 120 V AC / 60 Hz
Power consumption	600 W (with heater on)
Temperature range during operation	–25 °C to +50 °C (–13 °F to +122 °F) ambient temperature; unit not directly exposed to sunlight
Color of enclosure and illumination attachment	RAL 9007 (gray aluminum)
Color of plastic front-panel elements	RAL 7043 (traffic gray B)
Color of front panel	RAL 9007 (gray aluminum), RAL 7021 (black-gray)
Color of pedestal	RAL 7021 (black-gray)
Ticket slot	Pantone 114 U (yellow)
Supported data carrier formats	SKIDATA barcoded, magstripe, keycard ISO/ISO RFID
Declarations / Certifications	CE, $_{c}$UL$_{US}$ (only 120 V-option), FCC, ADA (in combination with pedestal APM STD BASE item code: 946010700)

SKIDATA, Inc. • One Harvard Way, Suite 5, Hillsborough • NJ 08844
[t] (908) 243-0000 • [f] (908) 243-0660 • [e] info.usa@skidata.com [w] www.skidatausa.com • Version 4.6 • 10.07.2012

© 2012 SKIDATA AG. All rights reserved.
The content provided herein is subject to change and possible editorial errors. Country-specific versions may vary. SKIDATA® is a registered trademark of SKIDATA AG in the USA, the European Union and other countries. Terms and conditions of the authorized SKIDATA distributor apply. The operator is fully responsible for compliance with any legal provisions applicable to the operation of the products.

City of Birmingham
A Walkable Community

MEMORANDUM

Engineering Dept.

DATE: **August 11, 2016**

TO: **Advisory Parking Committee**

FROM: **Paul T. O'Meara, City Engineer**

SUBJECT: **Traffic Control Equipment Upgrade - Phase 2**

After many months of study, the City and SP+ local office worked together to prepare a request for bids for new traffic control equipment at all five parking structures. The existing equipment is nearing the end of its life cycle, and has cost extra money in repairs the past few years to keep it going. The new package that was bid provided for a change in direction in the following ways:

1. For monthly permits, the system uses an AVI (Automatic Vehicle Identification) system. When it was installed in 2000, it was felt that this would help speed up processing of monthly permits. Drivers would simply attach an electronic card to their windshield, which is read by a reader mounted over the driving lanes. The system has been improved since then, but it is still prone to problems. The AVI system takes longer to find and read the card's signal, which makes drivers want to move the card around inside their car, which makes matters worse. Plus, the cost of operating the AVI system is significant. The new system would go back to what was used in the 1990's, which is to have the driver hold an electronic card within six inches of a laser beam reader.
2. To avoid the cost of cash handling, it was decided that the system would be made more efficient if all payments are electronic in nature. With new technology available, handling of credit or debit payments, as well as payments by Parkmobile was required of the new system. The new system also must offer a parking system issued debit card for those that do not want to pay by these other methods.
3. To avoid the cost of ticket handling, it was decided that we should see how a complete credit card in/credit card out system would work. The system goes through thousands of tickets each year, which adds up to a substantial amount of money. With the idea that society is getting less cash oriented, we thought we may be able to move in that direction.

Knowing that some of the above may prove difficult to implement with the public, the bid was issued with a request for two sets of prices in two phases. The first phase to implement would be a cashless, ticketless system at the Chester St. Structure only. This location was chosen because it has the least amount of daily traffic. It was felt that testing this system at Chester St. for about six months would be wise before a commitment is made to make all these changes at the other locations. The Phase 2 part of the bid covered the other four structures, with prices for both cashless and ticketless, as well as the traditional system offering both cash payment, and tickets for tracking.

The City Commission agreed with this approach, and awarded the recommended bidder the Phase I part of the contract at the Chester St. Structure. It took longer than anticipated, but the equipment was installed and began operating in April of this year. We are generally happy with the vendor's performance, and the quality of the equipment.

The public's reaction to the changes has been generally favorable, but a sizable majority is not happy with the changes. The biggest objection appears to be the removal of the ticket machine for tracking customers. The majority of customers arriving at the structure are anticipating a machine that provides them with a ticket. Instead, they are required to open their purse or wallet and produce a credit or debit card. There has been a lot of negative comment about this approach.

Now that we have finished Phase 1, it appears that the most frequent complaint has to do with not having tickets, and having to use a credit card number even when there is no charge. A hybrid approach is recommended. The entrance machine could be modified so that a ticket dispenser is provided. It would be provided as an option. For those that are used to using the credit card as an identifier, that could be used as well. Those regularly using the structure may find this more convenient than having to keep track of a ticket during each visit. (By making it optional, the use of tickets could be cut substantially.) The customer would still have to pay with the same payment options, so a credit/debit or Parkmobile option would have to be used if there is a charge. However, for the large number of people entering and exiting for free, they would be free of the problem of having to produce their credit card number.

Attached is the fee schedule that was received when bids were opened on this project. We paid $195,000 for the current upgrade that is now finished at the Chester St. Structure. As shown on the attached report prepared at the time of the contract award, if the City elects to go cashless and ticketless at the remaining four structures, the cost would be $501,000. If we offered cash and tickets in the payment, the four structures will cost $825,000. We believe offering a hybrid for the other four structures as described above will be somewhere between these two numbers.

If the APC agrees with this approach, we will request the vendor Harvey Electronics, to provide a cost estimate to modify their bid for the remaining four structures so that we can move forward with converting the other four. A suggested resolution is provided below.

SUGGESTED RESOLUTION:

To concur with staff that offering tickets but not a cash payment option may be the preferable approach for the conversion of the remaining four parking structure traffic control equipment, and to direct staff to obtain a quote from Harvey Electronics for this work, to be reviewed at the next Advisory Parking Committee regular meeting.

City of Birmingham
A Walkable Community

MEMORANDUM

Engineering Dept.

DATE: **September 15, 2016**

TO: **Advisory Parking Committee**

FROM: **Paul T. O'Meara, City Engineer**

SUBJECT: **Traffic Control Equipment Upgrades**

As discussed last month, the phase I of the system-wide traffic control equipment upgrade was implemented at the Chester St. Structure in April of this year. We have since learned that while eliminating cash from the payment options appears feasible, moving forward with a credit card in and out only is not recommended. With that in mind, we asked our Skidata equipment vendor (Harvey Electronics) to provide prices for the implementation of this hydbrid idea, which is in the middle of what was bid early last year. Prices have now been received, and are below:

Parking Structure	Cash & Tickets	No Cash or Tickets	Tickets & No Cash
Pierce	$271,000	$162,000	$231,824
Park	200,000	119,000	150,541
Peabody	206,000	125,000	159,730
N. Old Woodward	148,000	95,000	141,275
TOTALS	**$825,000**	**$501,000**	**$683,370**

As can be seen, the additional cost to the system will be about $182,000 if we move to install the ticket feature in the remaining four structures. There will also be ongoing additional cost to the system to supply tickets in these machines system-wide. Note that using the ticket as an identifier will be optional. Information will be provided at the entrances encouraging longer term parkers to identify themselves with their credit or PINless debit card. Doing so will simplify the exit transaction process. It will also reduce the number of tickets being used each day.

Given ongoing negative reaction to the cashless and ticketless system in place at Chester St., we have also asked Harvey for a price to retrofit the equipment at Chester St. As of this writing, we do not yet have that number, but hope to do so by the time we meet next week.

The entrance and exit machines will remain very similar to those that were installed at Chester St. A ticket spitting module will be added to the otherwise similar machines to provide this as the "base" identification option available to each daily customer. The budget for this work was prepared before bids were taken last winter. It appears that the work as now proposed will be about $20,000 over budget, not including the modifications being requested at Chester St. A suggested recommendation is provided below:

SUGGESTED RECOMMENDATION:

To recommend that the City Commission authorize the installation of the Skidata brand traffic control equipment at the four remaining parking structures using equipment that will not take cash, but will offer traditional tickets as a customer identification system. Further, to recommend that the new equipment at the Chester St. Structure be modified to offer customers the option of being identified with tickets instead of the current card only identification system.